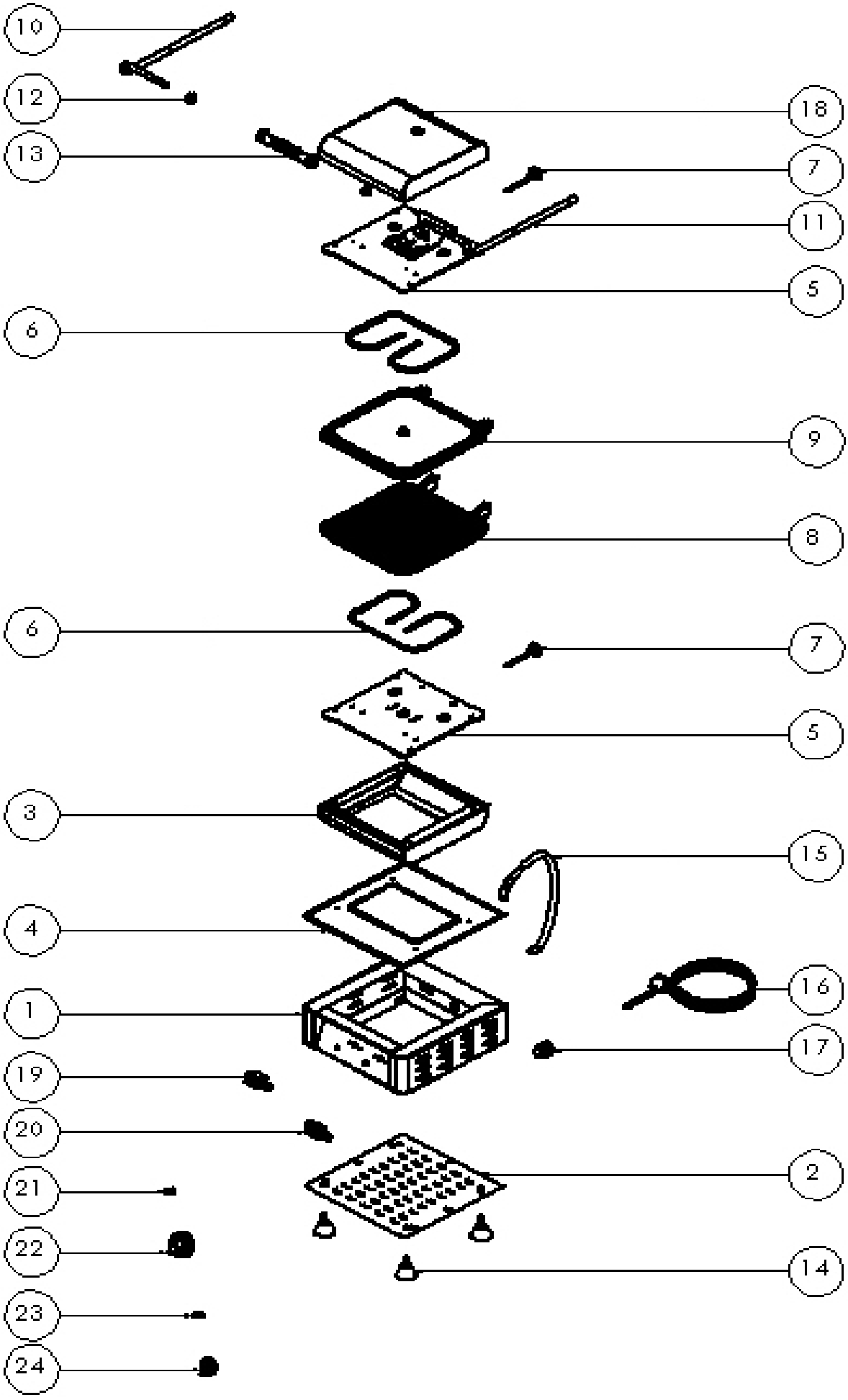

	ÜRÜN ADI / PRODUCT	TARİH / DATE	DETAY RESİM DETAIL PICTURE
GMG CATERING EQUIPMENT	WE 05	11.06.2018	SAYFA NO: 1 / 4 PAGE NO.: 1 / 4

WE 05			
		Dış Ölçüler / Outside Dim.	300 x 305 x 350 mm.
		Pişirme Yüzeyi / Baking Surface	23 x 23 cm.
		Termostat Aralığı (°C) / Thermostat Interval (°C)	52 - 310 °C
		Toplam Elektrik Gücü (kW) / Total Power (kW)	2,2 kW.
		Elektrik Besleme Gerilimi (V) / Power Supply Voltage (V)	220 V F+N
		Besleme Kablosu / Power Supply Cable	3 x 1,5 H07RN-F
		İç Tesisat Kabloları / Internal Cable	SİAF 2,5 mm²
		İzolasyon / Insulatıon	Taş Yünü / Rock Wool
		Ağırlık / Weight	21 kg.

NO.	AÇIKLAMA	DESCRIPTION	ÜRÜN NO. ITEM NO	ADET / PCS.
1	GÖVDE	MAIN BODY	WE05-01	1
2	TABAN	LOWER COVER	WE05-02	1
3	ALT KAPAK	BOTTOM COVER	WE05-03	1
4	ÇERCEVE	FRAME	WE05-04	1
5	REZİSTANS TUTUCU	RESISTANCE HOLDER	WE05-05	2
6	REZİSTANS	RESISTANCE	WE05-06	2
7	DÖKÜM SABİTLEYİCİ	CASTING FIXTURE	WE05-07	2
8	ALT DÖKÜM	LOWER CASTING	WE05-08	1
9	ÜST DÖKÜM	UPPER CASTING	WE05-09	1
10	SOL KOL	LEFT ARM	WE05-10	1
11	SAĞ KOL	RIGHT ARM	WE05-11	1
12	YÜZÜK	HANDLE CONNECTION ELEMENT	WE05-12	2
13	DERLİN TUTAMAK	UP COVER LIFT	WE05-13	1
14	AYAK	FEET	WE05-14	4
15	SPİRAL	CABLE PROTECTION	WE05-15	1
16	BESLEME KABLOSU	FEEDING CABLE	WE05-16	1
17	RAKOR	FEEDING CABLE SOCKET	WE05-17	1
18	ÜST KAPAK	UPPER COVER	WE05-18	1
19	TERMOSTAT	THERMOSTAT	WE05-19	1
20	ŞALTER	POWER SWITCH	WE05-20	1
21	TERMOSTAT LAMBASI	THERMOSTAT LAMP	WE05-21	1
22	TERMOSTAT DÜĞMESİ	THERMOSTAT BUTTON	WE05-22	1
23	ŞALTER LAMBASI	POWER SWITCH LAMP	WE05-23	1
24	ŞALTER DÜĞMESİ	POWER SWITCH BUTTON	WE05-24	1

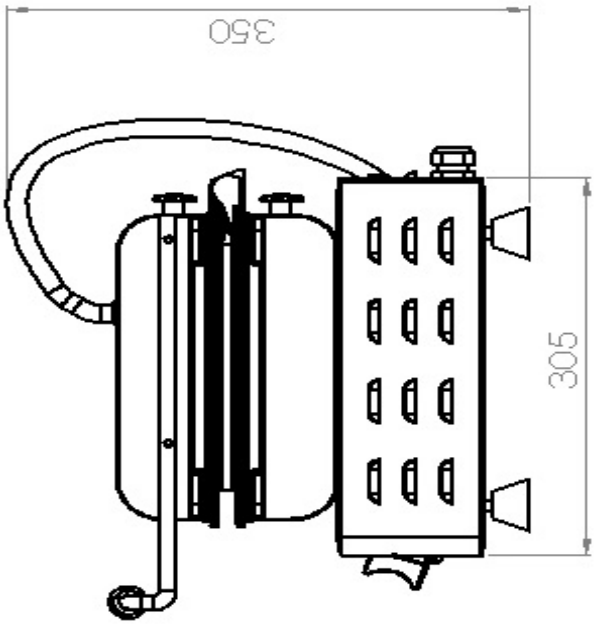

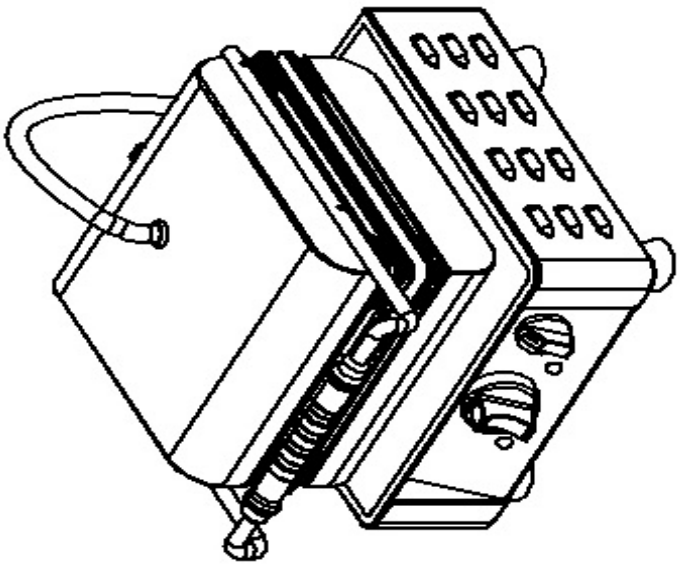

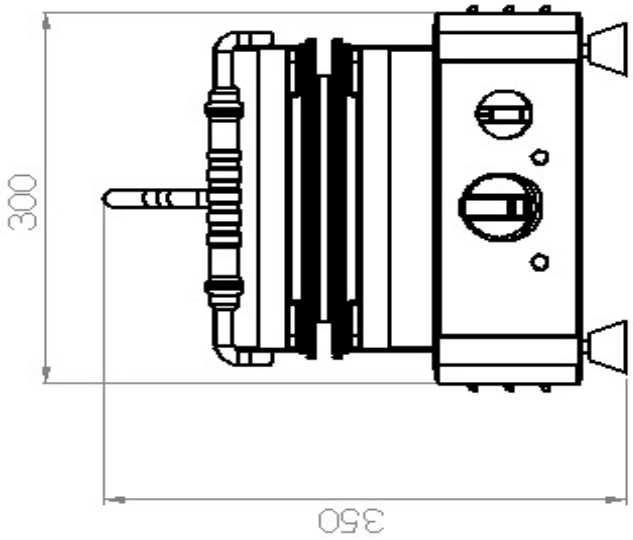

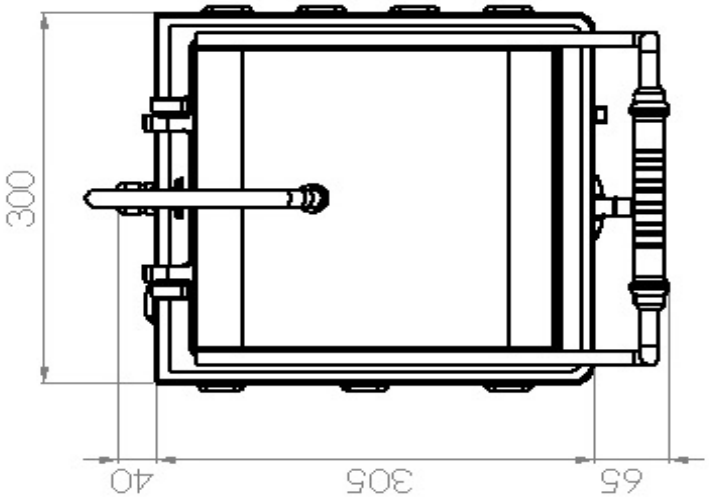

	ÜRÜN ADI / PRODUCT	TARİH / DATE	ÖLÇÜLENDİRME MEASUREMENTS
GMG CATERING EQUIPMENT	WE 05	11.06.2018	SAYFA NO: 3 / 4 PAGE NO.: 3 / 4

WE 05 WAFFLE MAKİNASI - ELEKTRİK ŞEMASI
WE 05 WAFFLE MACHINE - ELECTRICAL CIRCUIT DIAGRAM

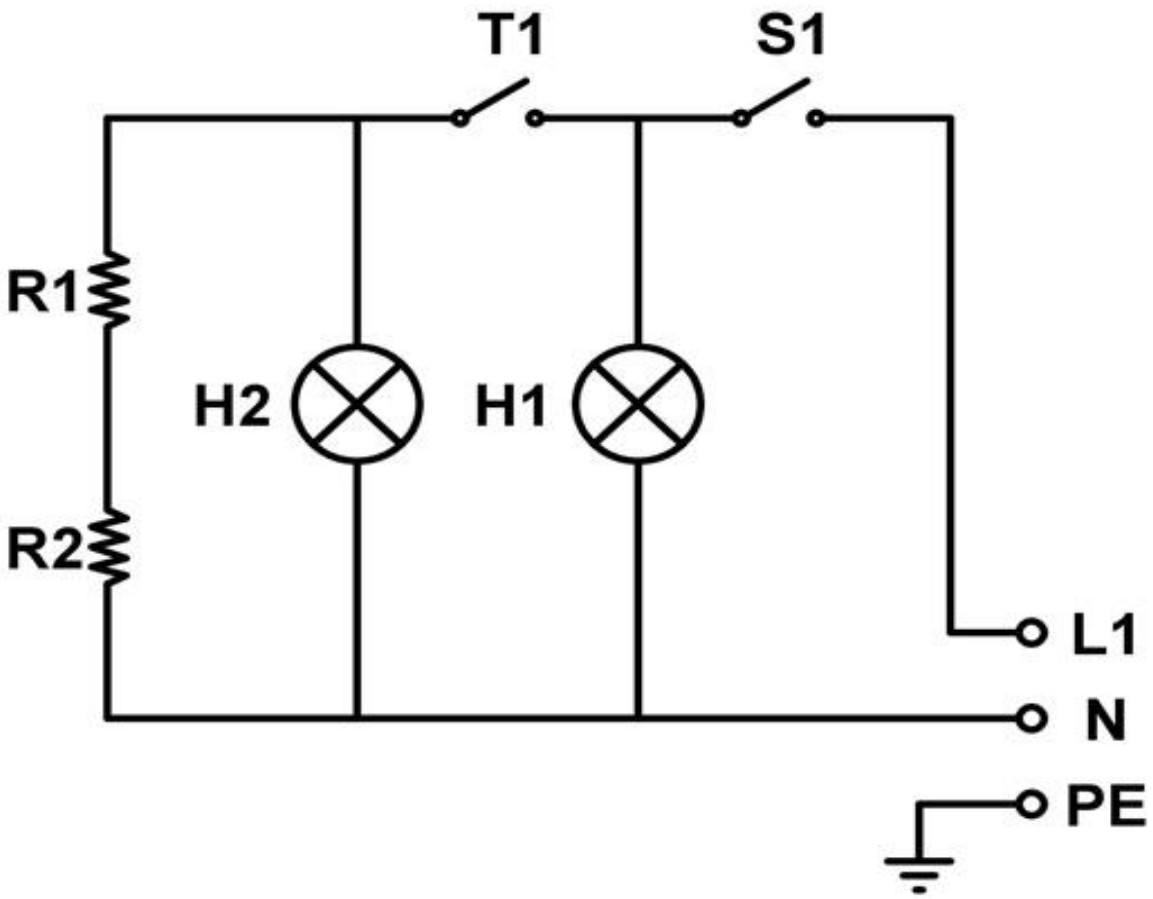

NO	AÇIKLAMA / DESCRIPTION	NO	AÇIKLAMA / DESCRIPTION
R1	Rezistans / Resıstance (1100 W)	S1	Şalter / Power Switch
R2	Rezistans / Resıstance (1100 W)	H1	Şalter Kontrol Lambası (Kırmızı) Power Swıtch Control Lamps (Red)
T1	Termostat / Thermostat (52 - 310 °C)	H2	Termostat Kontrol Lambası (Yeşil) Thermostat Control Lamps (Green)

NO.	STOK KODU	AÇIKLAMA / DESCRIPTION	AD. PCS.	ALIŞ FİYATI	SATIŞ FİYATI
1		GÖVDE / MAIN BODY	1		
2		TABAN / LOWER COVER	1		
3		ALT KAPAK / BOTTOM COVER	1		
4		ÇERCEVE / FRAME	1		
5		REZİSTANS TUTUCU RESISTANCE HOLDER	2		
6		REZİSTANS / RESISTANCE	2		
7		DÖKÜM SABİTLEYİCİ / CASTING FIXTURE	2		
8		ALT DÖKÜM / LOWER CASTING	1		
9		ÜST DÖKÜM / UPPER CASTING	1		
10		SOL KOL / LEFT ARM	1		
11		SAĞ KOL / RIGHT ARM	1		
12		YÜZÜK / HANDLE CONNECTION ELEMENT	2		
13		DERLİN TUTAMAK / UP COVER LIFT	1		
14		AYAK / FEET	4		
15		SPİRAL / CABLE PROTECTION	1		
16		BESLEME KABLOSU / FEEDING CABLE	1		
17		RAKOR / FEEDING CABLE SOCKET	1		
18		ÜST KAPAK / UPPER COVER	1		
19		TERMOSTAT / THERMOSTAT	1		
20		ŞALTER / POWER SWITCH	1		
21		TERMOSTAT LAMBASI / THERMOSTAT LAMP	1		
22		TERMOSTAT DÜĞMESİ / THERMOSTAT BUTTON	1		
23		ŞALTER LAMBASI / POWER SWITCH LAMP	1		
24		ŞALTER DÜĞMESİ / POWER SWITCH BUTTON	1		