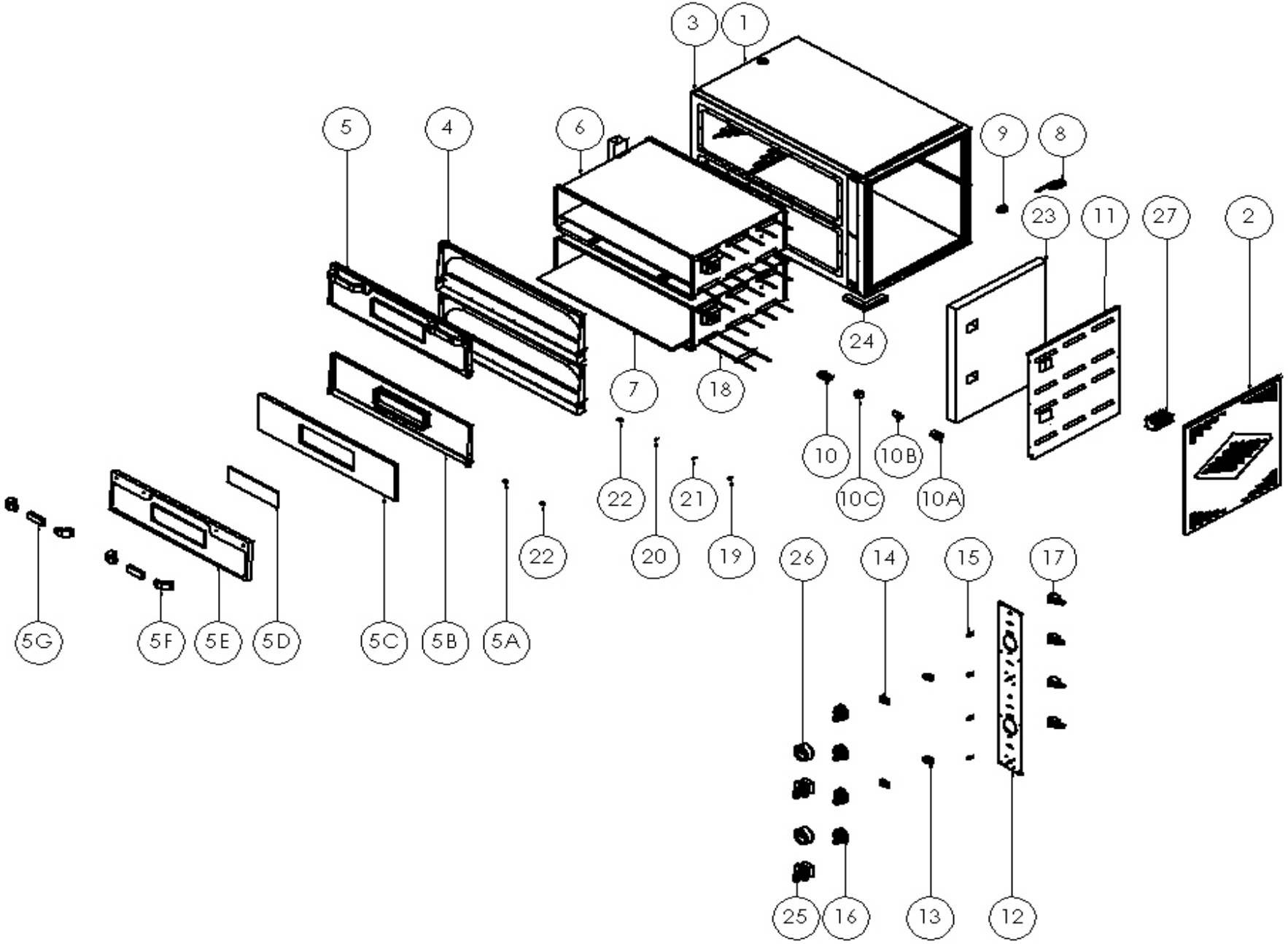

GMG CATERING EQUIPMENT	**ÜRÜN ADI / PRODUCT**	**TARİH / DATE**	**DETAY RESİM** **DETAIL PICTURE**
	PF 9262 DE	13.08.2018	**SAYFA NO: 1 / 4** **PAGE NO.: 1 / 4**

PF 9262 DE



Dış Ölçüler	1192 x 721 x 770 mm.	**Outside Dim.**	1192 x 721 x 770 mm.
İç Ölçüler	2 x 920 x 620 x 150 mm.	**Inside Dim.**	2 x 920 x 620 x 150 mm.
Pişirme Alanı	2 x 6 ad. Ø 30 cm.	**Baking Arena**	2 x 6 pcs. Ø 30 cm.
Pişirme Taşı Ölçüleri	2 x 915 x 610 x 17 mm.	**Baking Stone Dim.**	915 x 610 x 17 mm.
Termostat Aralığı (°C)	85 - 455 °C (4 ad. Bağımsız)	**Thermostat Interval (°C)**	85 - 455 °C (4 pcs. Independent)
Aydınlatma	2 ad. 25 W.	**Illumination**	2 pcs. 25 W.
Toplam Elektrik Gücü (kW)	12 x 1 kW = 12 kW.	**Total Power (kW)**	12 x 1 kW = 12 kW.
Elektrik Besleme Gerilimi (V/A)	400 V 3F+N / 3 x 32 A.	**Power Supply Voltage (V/A)**	400 V 3F+N / 3 x 32 A.
Besleme Kablosu	5 x 4 H07RN-F	**Power Supply Cable**	5 x 4 H07RN-F
İç Tesisat Kabloları	SİAF 2,5 mm²	**Internal Cable**	SİAF 2,5 mm²
İzolasyon	Taş Yünü	**Insulatıon**	Rock Wool
Ağırlık	150 kg.	**Weight**	150 kg.

NO.	AÇIKLAMA	DESCRIPTION	ÜRÜN NO. / ITEM NO	ADET / PCS.
1	GÖVDE	MAIN BODY	PF9262DE-01	1
2	YAN KAPAK	SIDE COVER	PF9262DE-02	2
3	ÖN PASLANMAZ ÇERCEVE	FRONT STAINLESS FRAME	PF9262DE-03	1
4	EMAYE ÇERCEVE	ENAMEL FRAME	PF9262DE-04	2
5	FIRIN ÖN KAPAK	OVEN FRONT COVER	PF9262DE-05	2
5A	M8 İMBUS CİVATA	M8 IMBUS PIN BOLT	PF9262DE-05A	4
5B	EMAYE KAPAK	ENAMEL COVER	PF9262DE-05B	2
5C	KAPAK İZOLASYONU	COVER ISOLATION	PF9262DE-05C	2
5D	GÖZETLEME CAMI	SIGHT GLASS	PF9262DE-05D	2
5E	PASLANMAZ KAPAK	STAINLESS COVER	PF9262DE-05E	2
5F	BAKALİT	BAKELITE	PF9262DE-05F	8
5G	ALÜMİNYUM KOL	ALUMINUM ARM	PF9262DE-05G	4
6	PİŞİRME KAZANI	COOKING BOILER	PF9262DE-06	2
7	PİŞİRME TAŞI	COOKING STONE	PF9262DE-07	2
8	BESLEME KABLOSU	FEEDING CABLE	PF9262DE-08	1
9	RAKOR	FEEDING CABLE SOCKET	PF9262DE-09	1
10	İÇ AYDINLATMA LAMBASI	INTERIOR LIGHTING LAMP	PF9262DE-10	2
10A	DUY	SOCKET	PF9262DE-10A	2
10B	AMPÜL	LAMP	PF9262DE-10B	2
10C	LAMBA CAMI	LAMP GLASS	PF9262DE-10C	2
11	ELEKTRİK MONTAJ PANOSU	ELECTRICAL MOUNTING PANEL	PF9262DE-11	1
12	PANEL	PANEL	PF9262DE-12	1
13	İÇ AYDINLATMA ANAHTARI	INTERIOR LIGHTING BUTTON	PF9262DE-13	2
14	İÇ AYDINLATMA ANAHTARI KORUMASI	INTERIOR LIGHTING BUTTON PROTECTION	PF9262DE-14	2
15	TERMOSTAT KONTROL LAMBASI	THERMOSTAT CONTROL LAMP	PF9262DE-15	4
16	TERMOSTAT DÜĞMESİ	THERMOSTAT BUTTON	PF9262DE-16	4
17	TERMOSTAT	THERMOSTAT	PF9262DE-17	4
18	REZİSTANS	RESISTANCE	PF9262DE-18	12
19	M6 KÖR SOMUN	M6 BLIND NUT	PF9262DE-19	4
20	M6 DÜZ RONDELA	M6 FLAT WASHER	PF9262DE-20	4
21	M6 YAYLI RONDELA	M6 SPRING WASHER	PF9262DE-21	4
22	M6 İMBUS CİVATA	M6 IMBUS PIN BLOT	PF9262DE-22	8
23	İZOLASYON	INSULATION	PF9262DE-23	1
24	FIRIN AYAK	OVEN FOOT	PF9262DE-24	5
25	İKİ FAZLI PAKO ŞALTER	TWO PHASE INTERRUPTION SWITCH	PF9262DE-25	2
26	TERMOMETRE (PF 9262 DE - T MODELİ İÇİN)	THERMOMETER ONLY WTIH PF 9262 DE - T)	PF9262DE-26	2
27	KONTAKTÖR	CONTACTOR	PF9262DE-27	4

GMG CATERING EQUIPMENT

ÜRÜN ADI / PRODUCT	**TARİH / DATE**	**DETAY RESİM LİSTESİ** **DETAIL PICTURE LIST**
PF 9262 DE	13.08.2018	**SAYFA NO: 2 / 4** **PAGE NO.: 2 / 4**

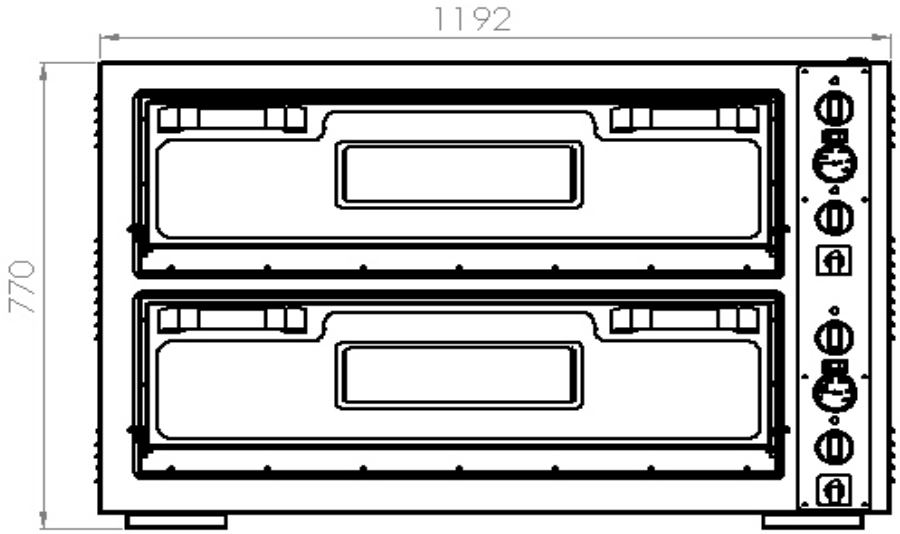

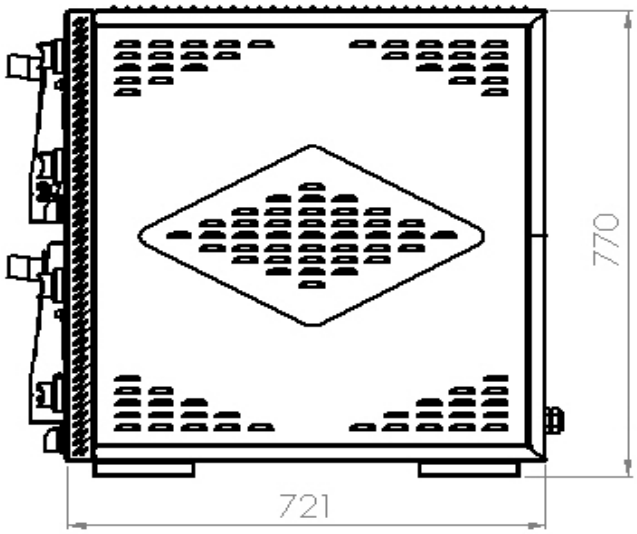

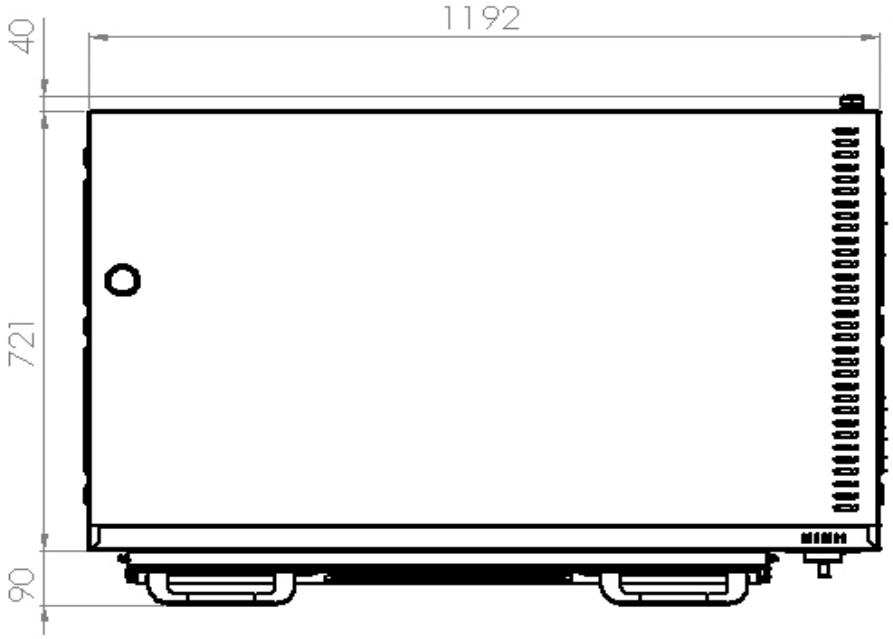

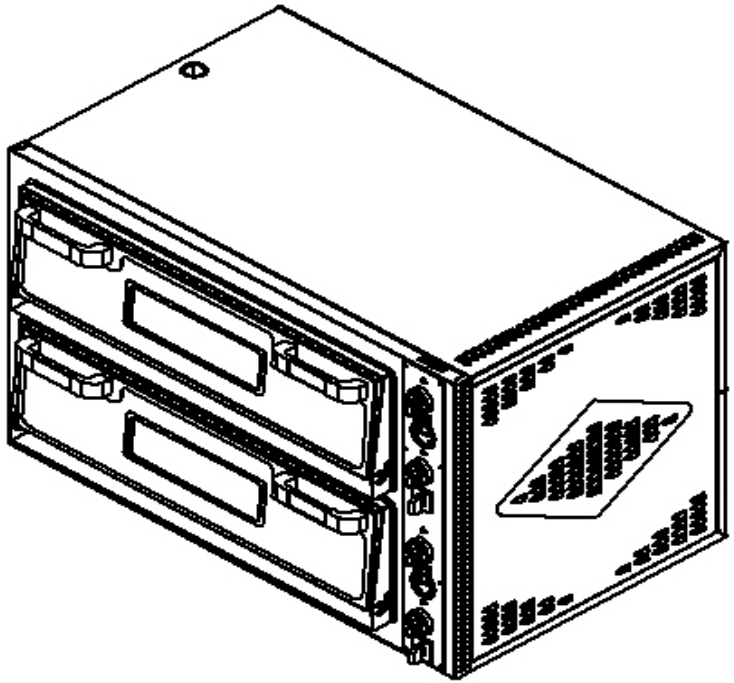

GMG CATERING EQUIPMENT	**ÜRÜN ADI / PRODUCT**	**TARİH / DATE**	**ÖLÇÜLENDİRME MEASUREMENTS**
	PF 9262 DE	13.08.2018	**SAYFA NO: 3 / 4** **PAGE NO.: 3 / 4**

PF 9262 DE PİZZA FIRINI - ELEKTRİK ŞEMASI
PF 9262 DE PIZZA OVEN - ELECTRICAL DIAGRAM

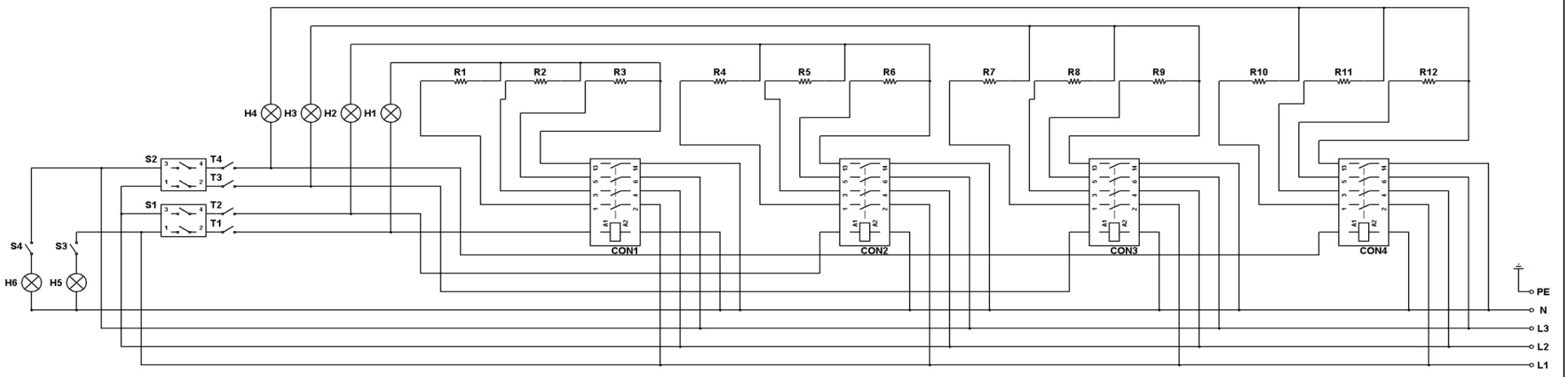

NO	AÇIKLAMA / DESCRIPTION	NO	AÇIKLAMA / DESCRIPTION	NO	AÇIKLAMA / DESCRIPTION	NO	AÇIKLAMA / DESCRIPTION	NO	AÇIKLAMA / DESCRIPTION	NO	AÇIKLAMA / DESCRIPTION	NO	AÇIKLAMA / DESCRIPTION
R1 ... R12	Rezistans / Resistance (1000 W)	T1 - T2 - T3 - T4	Termostat / Thermostat (85 - 455 °C)	H1 - H2 - H3 - H4	Termostat Kontrol Lambası Thermostat Control Lamp	S1 - S2	İki Fazlı Pako Şalter Two Phase Interruption Switch	H5 - H6	İç Aydınlatma Lambası Interior Lighting Lamp (25W)	S3 - S4	Aydınlatma Anahtarı Lighting Switch (T125 16A)	CON1 ... CON4	Kontaktör / Contactor

GMG CATERING EQUIPMENT	**ÜRÜN ADI / PRODUCT**	**TARİH / DATE**	**ELEKTRİK ŞEMASI** **ELECTRICAL DIAGRAM**
	PF 9262 DE	13.08.2018	**SAYFA NO: 4 / 4** **PAGE NO.: 4 / 4**