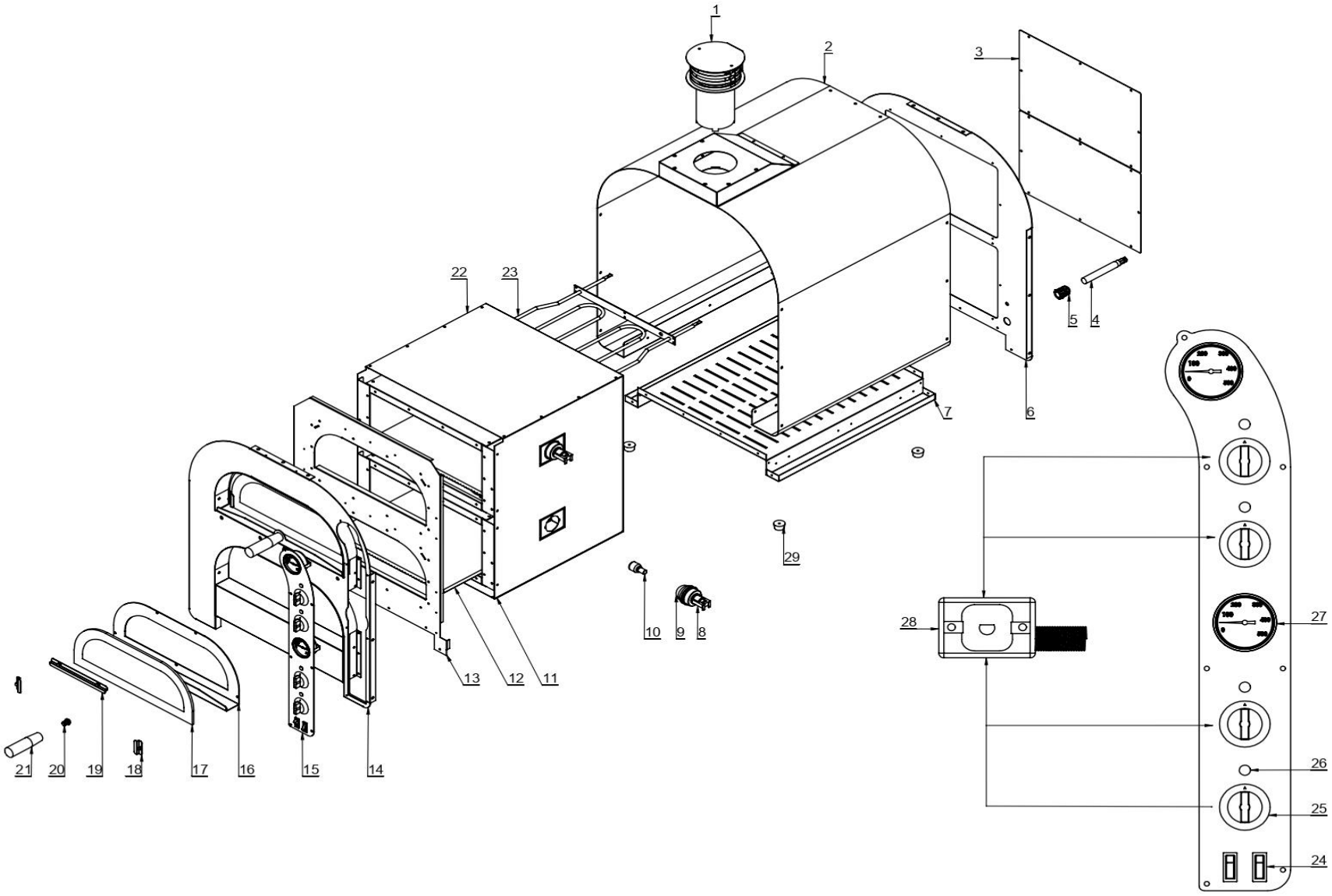


| | ÜRÜN ADI / PRODUCT | TARİH / DATE | DETAY RESİM<br>DETAIL PICTURE |
|---|---|---|---|
| GMG CATERING EQUIPMENTS | PF 4040DE4 R | 17.07.2023 | SAYFA NO: 1 / 5<br>PAGE NO: 1 / 5 |

**PF 4040DE4 R**



| | | | |
|---|---|---|---|
| **Dış Ölçüler** | 657 x 775 x 917,5 mm. | **Outside Dim.** | 657 x 775 x 917,5 mm. |
| **İç Ölçüler** | 2 x 400 x 400 x 150 mm. | **Inside Dim.** | 2 x 400 x 400 x 150 mm. |
| **Pişirme Alanı** | 2 x 1 ad. (Ø 39 cm.) | **Baking Arena** | 2 x 1 pcs. (Ø 39 cm.) |
| **Pişirme Taşı Ölçüleri** | 2 x 400 x 400 x 14 mm. | **Baking Stone Dim.** | 2 x 400 x 400 x 14 mm. |
| **Termostat Aralığı (°C)** | 85 - 455 °C ( 4 ad. Bağımsız ) | **Thermostat Interval (°C)** | 85 - 455 °C ( 4 pcs. Independent ) |
| **Aydınlatma** | 2 ad. 25 W. | **Illumination** | 2 pcs. 25 W. |
| **Toplam Elektrik Gücü (kW)** | 4 x 1750 W. = 7 kW. | **Total Power (kW)** | 4 x 1750 W. = 7 kW. |
| **Elektrik Bes. Gerilimi (V/A)** | 400 V 3 F+N / 19 A. | **Power Supply Voltage (V/A)** | 400 V 3 F+N / 19 A. |
| **Besleme Kablosu** | 5 x 2,5 H07RN-F | **Power Supply Cable** | 5 x 2,5 H07RN-F |
| **İç Tesisat Kabloları** | SİAF 2.5 mm² | **Internal Cable** | SİAF 2.5 mm² |
| **İzolasyon** | Taş Yünü | **Insulatıon** | Rock Wool |
| **Ağırlık** | 72 Kg. | **Weight** | 72 Kg. |

| NO. | AÇIKLAMA | DESCRIPTION | ÜRÜN NO. / ITEM NO | ADET / PCS. |
|---|---|---|---|---|
| 1 | BACA | CHIMNEY | PF4040DE4 R-01 | 1 |
| 2 | GÖVDE | MAIN BODY | PF4040DE4 R-02 | 1 |
| 3 | ARKA KAPAK | BACK COVER | PF4040DE4 R-03 | 2 |
| 4 | BESLEME KABLOSU | FEEDING CABLE | PF4040DE4 R-04 | 1 |
| 5 | RAKOR | FEEDING CABLE SOCKET | PF4040DE4 R-05 | 1 |
| 6 | GÖVDE ARKA SAC | BODY BACK SHEET | PF4040DE4 R-06 | 1 |
| 7 | GÖVDE TABAN SACI | BODY BASE SHEET | PF4040DE4 R-07 | 1 |
| 8 | DUY | SOCKET | PF4040DE4 R-08 | 2 |
| 9 | LAMBA CAMI | LAMP GLASS | PF4040DE4 R-09 | 2 |
| 10 | AMPUL | LAMP | PF4040DE4 R-10 | 2 |
| 11 | PİŞİRME KAZANI | COOKING BOILER | PF4040DE4 R-11 | 2 |
| 12 | PİŞİRME TAŞI | COOKING STONE | PF4040DE4 R-12 | 2 |
| 13 | ÖN ÇERÇEVE | FRONT FRAME | PF4040DE4 R-13 | 1 |
| 14 | ÖN PANEL | FRONT PANEL | PF4040DE4 R-14 | 1 |
| 15 | KONTROL PANELİ | CONTROL PANEL | PF4040DE4 R-15 | 1 |
| 16 | EMAYE KAPAK | ENAMEL COVER | PF4040DE4 R-16 | 2 |
| 17 | GÖZETLEME CAMI | SIGHT GLASS | PF4040DE4 R-17 | 2 |
| 18 | GÖZETLEME CAMI SABİTLEME SACI - KÜÇÜK | SIGHT GLASS FIXING SHEET - SMALL | PF4040DE4 R-18 | 4 |
| 19 | GÖZETLEME CAMI SABİTLEME SACI - BÜYÜK | SIGHT GLASS FIXING SHEET - LARGE | PF4040DE4 R-19 | 2 |
| 20 | TUTMA KULPU VİDASI | HOLDING HANDLE BOLT | PF4040DE4 R-20 | 2 |
| 21 | TUTMA KULPU | HOLDING HANDLE | PF4040DE4 R-21 | 2 |
| 22 | İZOLASYON | ISOLATION | PF4040DE4 R-22 | 1 |
| 23 | REZİSTANS | RESISTANCE | PF4040DE4 R-23 | 4 |
| 24 | İÇ AYDINLATMA ANAHTARI | INTERIOR LIGHTING BUTTON | PF4040DE4 R-24 | 2 |
| 25 | TERMOSTAT DÜĞMESİ | THERMOSTAT BUTTON | PF4040DE4 R-25 | 4 |
| 26 | TERMOSTAT KONTROL LAMBASI | THERMOSTAT CONTROL LAMP | PF4040DE4 R-26 | 4 |
| 27 | TERMOMETRE | THERMOMETER | PF4040DE4 R-27 | 1 |
| 28 | TERMOSTAT | THERMOSTAT | PF4040DE4 R-28 | 4 |
| 29 | FIRIN AYAĞI | OVEN FOOT | PF4040DE4 R-29 | 4 |
| 30 | | | | |
| 31 | | | | |
| 32 | | | | |
| 33 | | | | |
| 34 | | | | |
| 35 | | | | |
| 36 | | | | |
| 37 | | | | |
| 38 | | | | |
| 39 | | | | |
| 40 | | | | |
| 41 | | | | |
| 42 | | | | |
| 43 | | | | |
| 44 | | | | |
| 45 | | | | |
| 46 | | | | |
| 47 | | | | |
| 48 | | | | |
| 49 | | | | |
| 50 | | | | |

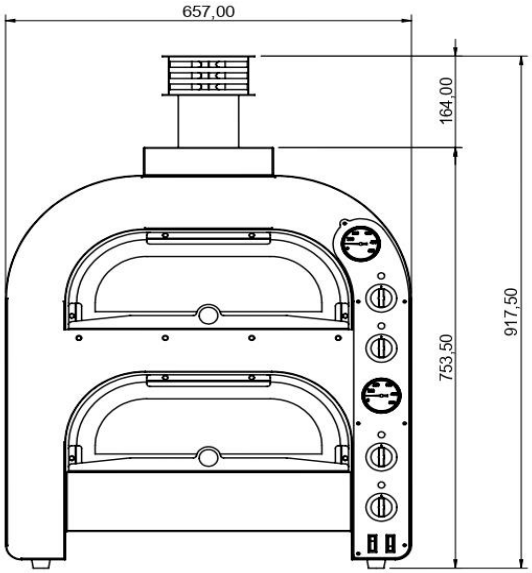


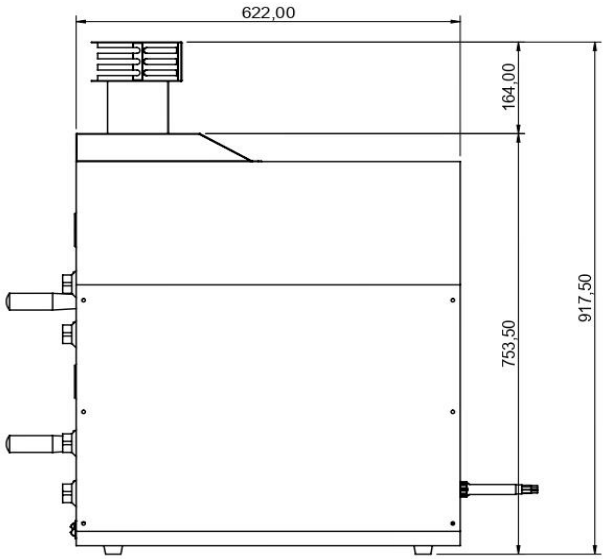


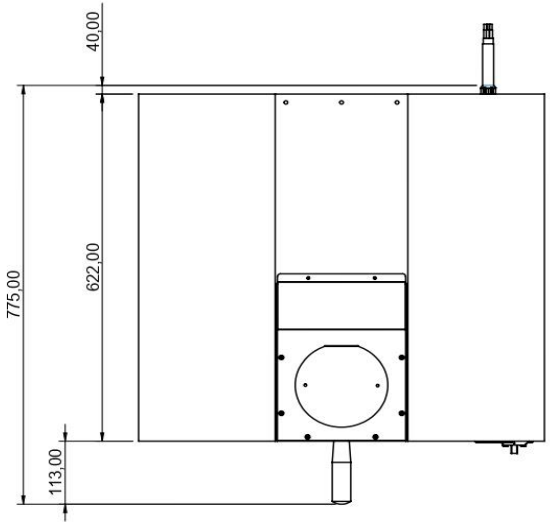


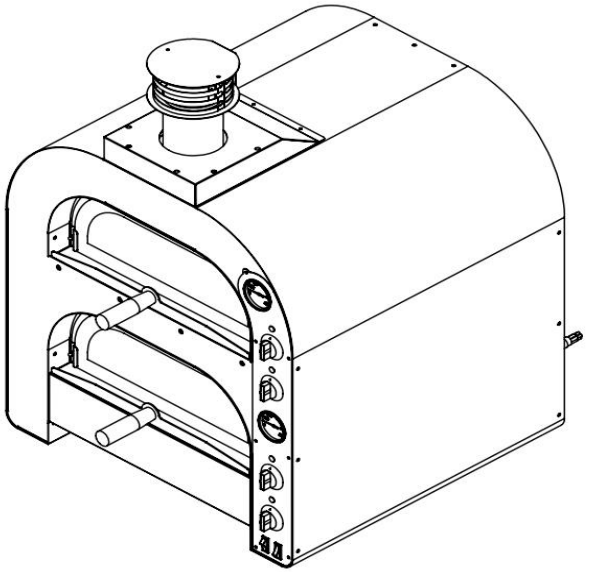

| | ÜRÜN ADI / PRODUCT | TARİH / DATE | ÖLÇÜLENDİRME<br>MEASUREMENTS |
|---|---|---|---|
| GMG CATERING EQUIPMENTS | PF 4040DE4 R | 17.07.2023 | SAYFA NO: 3 / 5<br>PAGE NO: 3 / 5 |

# PF 4040 DE4 PİZZA FIRINI - ELEKTRİK ŞEMASI
# PF 4040 DE4 PIZZA OVEN - ELECTRICAL DIAGRAM

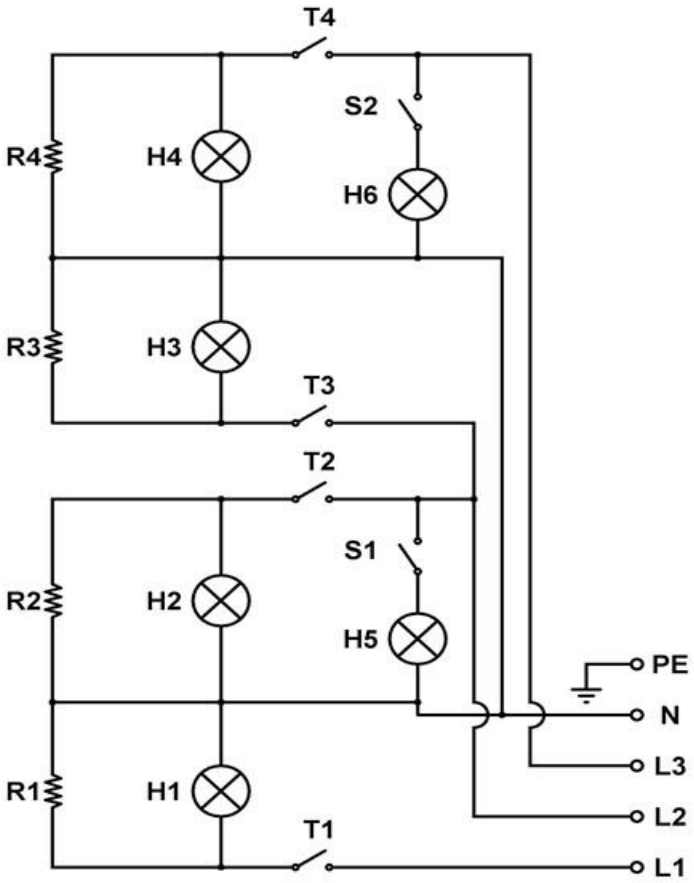


| NO | AÇIKLAMA / DESCRIPTION | NO | AÇIKLAMA / DESCRIPTION |
|---|---|---|---|
| R1 - R2 - R3 - R4 | Rezistans / Resistance ( 1750 W ) | T1 - T2 - T3 - T4 | Termostat / Thermostat ( 85 - 455 °C ) |
| H1 - H2 - H3 - H4 | Termostat Kontrol Lambası Thermostat Control Lamp | S1 - S2 | Aydınlatma Anahtarı Lighting Switch ( T125 16A ) |
| H5 - H6 | İç Aydınlatma Lambası Interior Lighting Lamp ( 25W ) | | |

| | ÜRÜN ADI / PRODUCT | TARİH / DATE | ELEKTRİK ŞEMASI<br>ELECTRICAL DIAGRAM |
|---|---|---|---|
| GMG CATERING EQUIPMENTS | PF 4040DE4 R | 17.07.2023 | SAYFA NO: 4 / 5<br>PAGE NO: 4 / 5 |

## PF 4040 DE4 PİZZA FIRINI - ELEKTRİK ŞEMASI
## PF 4040 DE4 PIZZA OVEN - ELECTRICAL DIAGRAM

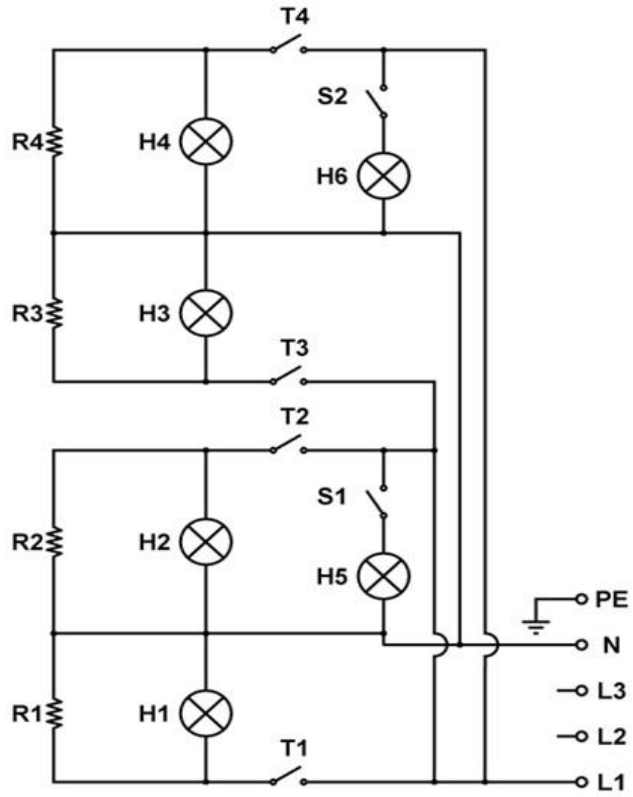


| NO | AÇIKLAMA / DESCRIPTION | NO | AÇIKLAMA / DESCRIPTION |
|---|---|---|---|
| R1 - R2 - R3 - R4 | Rezistans / Resistance ( 1750 W ) | T1 - T2 - T3 - T4 | Termostat / Thermostat ( 85 - 455 °C ) |
| H1 - H2 - H3 - H4 | Termostat Kontrol Lambası Thermostat Control Lamp | S1 - S2 | Aydınlatma Anahtarı Lighting Switch ( T125 16A ) |
| H5 - H6 | İç Aydınlatma Lambası Interior Lighting Lamp ( 25W ) | | |

| | ÜRÜN ADI / PRODUCT | TARİH / DATE | ELEKTRİK ŞEMASI<br>ELECTRICAL DIAGRAM |
|---|---|---|---|
| GMG CATERING EQUIPMENTS | PF 4040DE4 R | 17.07.2023 | SAYFA NO: 5 / 5<br>PAGE NO: 5 / 5 |