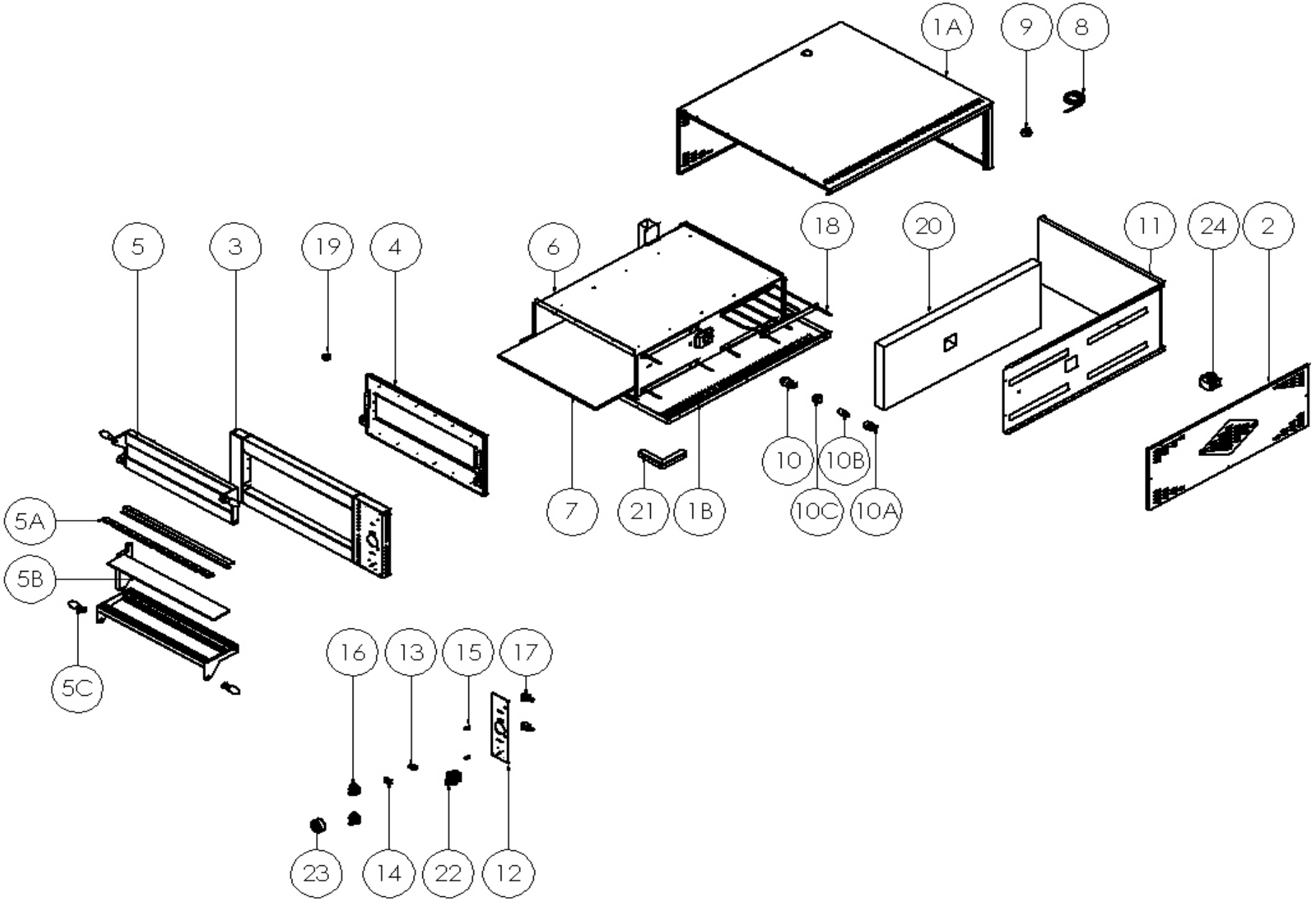

	ÜRÜN ADI / PRODUCT	TARİH / DATE	DETAY RESİM DETAIL PICTURE
GMG CATERING EQUIPMENT	PE 66 E	13.08.2018	SAYFA NO: 1 / 4 PAGE NO.: 1 / 4

PE 66 E					
	Dış Ölçüler	950 x 1066 x 407,5 mm.	**Outside Dim.**	950 x 1066 x 407,5 mm.	
	İç Ölçüler	620 x 920 x 150 mm.	**Inside Dim.**	620 x 920 x 150 mm.	
	Pişirme Alanı	6 ad. Ø 30 cm.	**Baking Arena**	6 pcs. Ø 30 cm.	
	Pişirme Taşı Ölçüleri	915 x 610 x 17 mm.	**Baking Stone Dim.**	915 x 610 x 17 mm.	
	Termostat Aralığı (°C)	85 - 455 °C (2 ad. Bağımsız)	**Thermostat Interval (°C)**	85 - 455 °C (2 pcs. Independent)	
	Aydınlatma	1 ad. 25 W.	**Illumination**	1 pcs. 25 W.	
	Toplam Elektrik Gücü (kW)	4 x 1,5 kW = 6 kW.	**Total Power (kW)**	4 x 1,5 kW = 6 kW.	
	Elektrik Bes. Gerilimi (V/A)	400 V 3F+N / 3 x 16 A.	**Power Supply Voltage (V/A)**	400 V 3F+N / 3 x 16 A.	
	Besleme Kablosu	5 x 2,5 H07RN-F	**Power Supply Cable**	5 x 2,5 H07RN-F	
	İç Tesisat Kabloları	SİAF 2,5 mm²	**Internal Cable**	SİAF 2,5 mm²	
	İzolasyon	Taş Yünü	**Insulatıon**	Rock Wool	
	Ağırlık	93 kg.	**Weight**	93 kg.	

NO.	AÇIKLAMA	DESCRIPTION	ÜRÜN NO. / ITEM NO	ADET / PCS.
1A	GÖVDE	MAIN BODY	PE66E-01A	1
1B	TABAN	BASE	PE66E-01B	1
2	YAN KAPAK	SIDE COVER	PE66E-02	2
3	ÖN PASLANMAZ	FRONT STAINLESS	PE66E-03	1
4	ÖN ÇERCEVE	FRONT FRAME	PE66E-04	1
5	ÖN KAPAK	OVEN FRONT COVER	PE66E-05	1
5A	CAM TUTUCU	GLASS HOLDER	PE66E-05A	2
5B	GÖZETLEME CAMI	SIGHT GLASS	PE66E-05B	1
5C	BAKALİT	BAKELITE	PE66E-05C	2
6	PİŞİRME KAZANI	COOKING BOILER	PE66E-06	1
7	PİŞİRME TAŞI	COOKING STONE	PE66E-07	1
8	BESLEME KABLOSU	FEEDING CABLE	PE66E-08	1
9	RAKOR	FEEDING CABLE SOCKET	PE66E-09	1
10	LAMBA	INTERIOR LIGHTING LAMP	PE66E-10	1
10A	DUY	SOCKET	PE66E-10A	1
10B	AMPÜL	LAMP	PE66E-10B	1
10C	LAMBA CAMI	LAMP GLASS	PE66E-10C	1
11	ELEKTRIK MONTAJ PANOSU	ELECTRICAL MOUNTING PANEL	PE66E-11	1
12	PANEL	PANEL	PE66E-12	1
13	İÇ AYDINLATMA ANAHTARI	INTERIOR LIGHTING BUTTON	PE66E-13	1
14	İÇ AYDINLATMA ANAHTARI KORUMASI	INTERIOR LIGHTING BUTTON PROTECTION	PE66E-14	1
15	TERMOSTAT KONTROL LAMBASI	THERMOSTAT CONTROL LAMP	PE66E-15	2
16	TERMOSTAT DÜĞMESİ	THERMOSTAT BUTTON	PE66E-16	2
17	TERMOSTAT	THERMOSTAT	PE66E-17	2
18	REZİSTANS	RESISTANCE	PE66E-18	4
19	KAPAK STOP KAUÇUĞU	COVER STOP RUBBER	PE66E-19	1
20	İZOLASYON	INSULATION	PE66E-20	1
21	FIRIN AYAK	OVEN FOOT	PE66E-21	5
22	İKİ FAZLI PAKO ŞALTER	TWO PHASE INTERRUPTION SWITCH	PE66E-22	1
23	TERMOMETRE	THERMOMETER	PE66E-23	1
24	KONTAKTÖR	CONTACTOR	PE66E-24	2

GMG CATERING EQUIPMENT	**ÜRÜN ADI / PRODUCT**	**TARİH / DATE**	**DETAY RESİM LİSTESİ** **DETAIL PICTURE LIST**
	PE 66 E	13.08.2018	**SAYFA NO: 2 / 4** **PAGE NO.: 2 / 4**

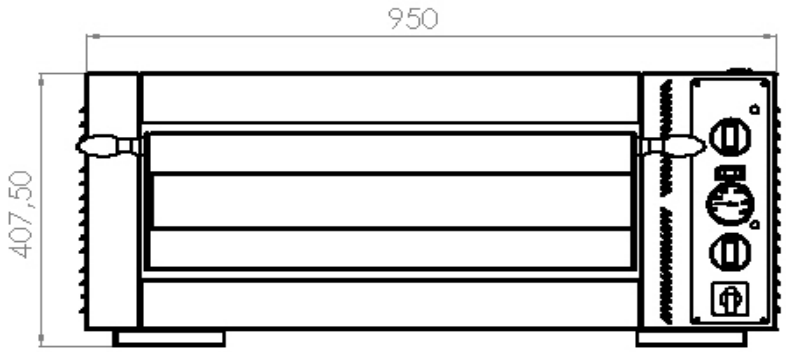

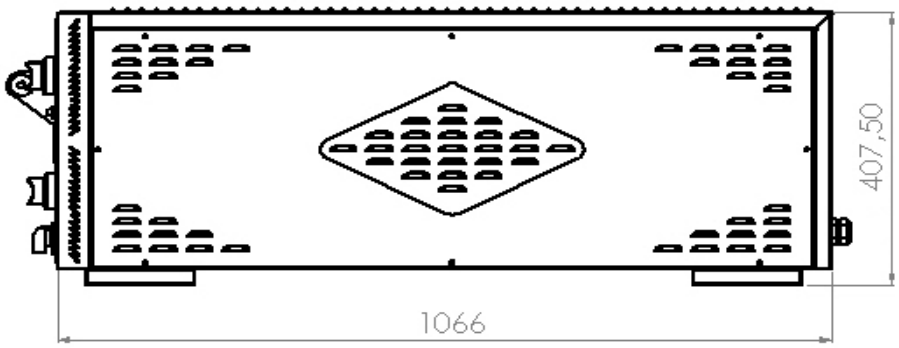

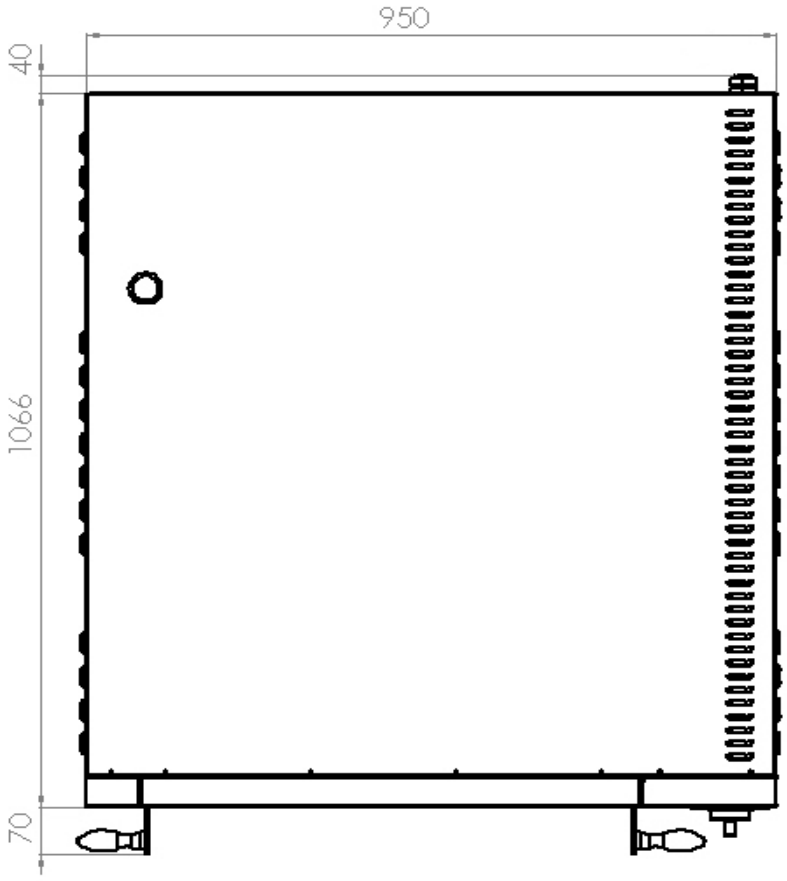

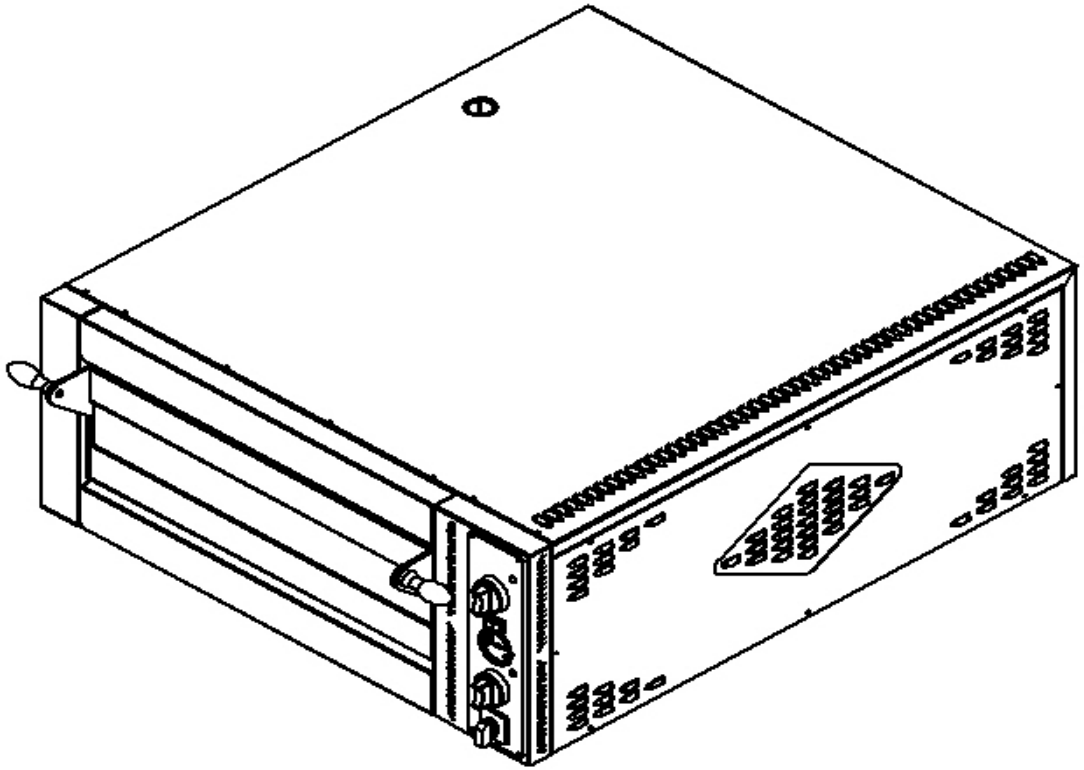

GMG CATERING EQUIPMENT	**ÜRÜN ADI / PRODUCT**	**TARİH / DATE**	**ÖLÇÜLENDİRME MEASUREMENTS**
	PE 66 E	13.08.2018	**SAYFA NO: 3 / 4** **PAGE NO.: 3 / 4**

PE 66 E PİZZA FIRINI - ELEKTRİK ŞEMASI
PE 66 E PIZZA OVEN - ELECTRICAL DIAGRAM

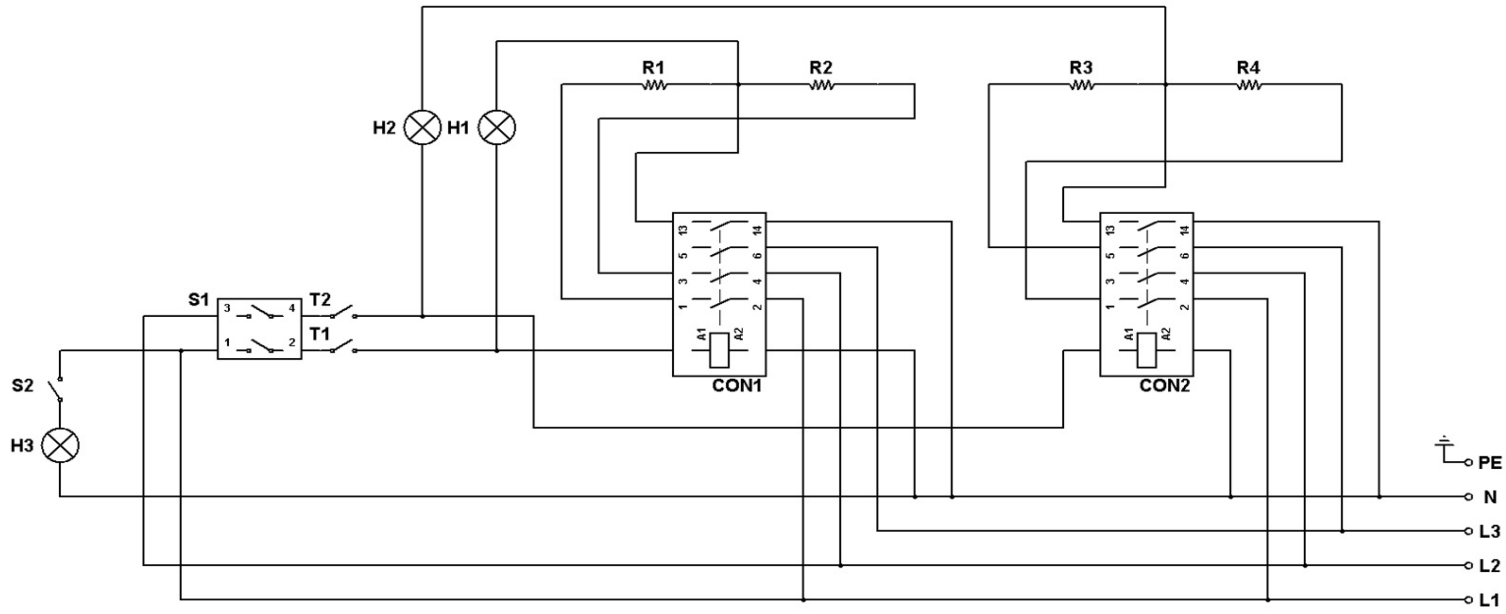

NO	AÇIKLAMA / DESCRIPTION	NO	AÇIKLAMA / DESCRIPTION	NO	AÇIKLAMA / DESCRIPTION	NO	AÇIKLAMA / DESCRIPTION	NO	AÇIKLAMA / DESCRIPTION	NO	AÇIKLAMA / DESCRIPTION	NO	AÇIKLAMA / DESCRIPTION
R1 ... R4	Rezistans / Resistance (1500 W)	T1 - T2	Termostat / Thermostat (85 - 455 °C)	H1 - H2	Termostat Kontrol Lambası Thermostat Control Lamp	S1	İki Fazlı Pako Şalter Two Phase Interruption Switch	H3	İç Aydınlatma Lambası Interior Lighting Lamp (25W)	S2	Aydınlatma Anahtarı Lighting Switch (T125 16A)	CON1 - CON2	Kontaktör / Contactor

GMG CATERING EQUIPMENT	**ÜRÜN ADI / PRODUCT**	**TARİH / DATE**	**ELEKTRİK ŞEMASI** **ELECTRICAL DIAGRAM**
	PE 66 E	13.08.2018	**SAYFA NO: 4 / 4** **PAGE NO.: 4 / 4**