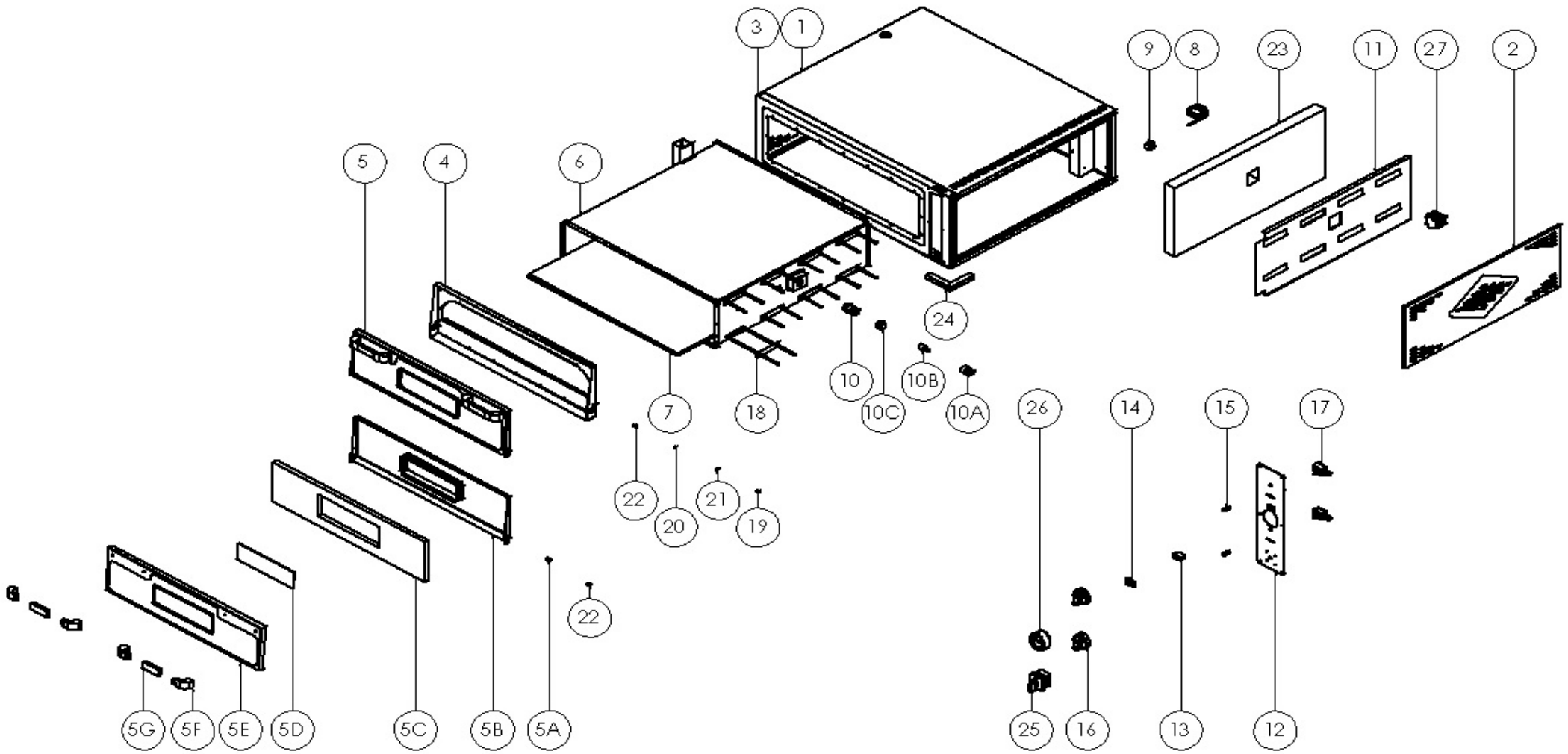

GMG CATERING EQUIPMENT	**ÜRÜN ADI / PRODUCT**	**TARİH / DATE**	**DETAY RESİM** **DETAIL PICTURE**
	PF 9292 E	13.08.2018	**SAYFA NO: 1 / 4** **PAGE NO.: 1 / 4**

PF 9292 E



Dış Ölçüler	1192 x 1018 x 435 mm.	**Outside Dim.**	1192 x 1018 x 435 mm.
İç Ölçüler	920 x 920 x 150 mm.	**Inside Dim.**	920 x 920 x 150 mm.
Pişirme Alanı	9 ad. Ø 30 cm.	**Baking Arena**	9 pcs. Ø 30 cm.
Pişirme Taşı Ölçüleri	2 x 915 x 450 x 17 mm.	**Baking Stone Dim.**	2 x 915 x 450 x 17 mm.
Termostat Aralığı (°C)	85 - 455 °C (2 ad. Bağımsız)	**Thermostat Interval (°C)**	85 - 455 °C (2 pcs. Independent)
Aydınlatma	1 ad. 25 W.	**Illumination**	1 pcs. 25 W.
Toplam Elektrik Gücü (kW)	8 x 1 kW = 8 kW.	**Total Power (kW)**	8 x 1 kW = 8 kW.
Elektrik Besleme Gerilimi (V/A)	400 V 3F+N / 3 x 22 A.	**Power Supply Voltage (V/A)**	400 V 3F+N / 3 x 22 A.
Besleme Kablosu	5 x 2,5 H07RN-F	**Power Supply Cable**	5 x 2,5 H07RN-F
İç Tesisat Kabloları	SİAF 2,5 mm²	**Internal Cable**	SİAF 2,5 mm²
İzolasyon	Taş Yünü	**Insulatıon**	Rock Wool
Ağırlık	130 kg.	**Weight**	130 kg.

NO.	AÇIKLAMA	DESCRIPTION	ÜRÜN NO. / ITEM NO	ADET / PCS.
1	GÖVDE	MAIN BODY	PF9292E-01	1
2	YAN KAPAK	SIDE COVER	PF9292E-02	2
3	ÖN PASLANMAZ ÇERCEVE	FRONT STAINLESS FRAME	PF9292E-03	1
4	EMAYE ÇERCEVE	ENAMEL FRAME	PF9292E-04	1
5	FIRIN ÖN KAPAK	OVEN FRONT COVER	PF9292E-05	1
5A	M8 İMBUS CİVATA	M8 IMBUS PIN BOLT	PF9292E-05A	2
5B	EMAYE KAPAK	ENAMEL COVER	PF9292E-05B	1
5C	KAPAK İZOLASYONU	COVER ISOLATION	PF9292E-05C	1
5D	GÖZETLEME CAMI	SIGHT GLASS	PF9292E-05D	1
5E	PASLANMAZ KAPAK	STAINLESS COVER	PF9292E-05E	1
5F	BAKALİT	BAKELITE	PF9292E-05F	4
5G	ALÜMİNYUM KOL	ALUMINUM ARM	PF9292E-05G	2
6	PİŞİRME KAZANI	COOKING BOILER	PF9292E-06	1
7	PİŞİRME TAŞI	COOKING STONE	PF9292E-07	2
8	BESLEME KABLOSU	FEEDING CABLE	PF9292E-08	1
9	RAKOR	FEEDING CABLE SOCKET	PF9292E-09	1
10	İÇ AYDINLATMA LAMBASI	INTERIOR LIGHTING LAMP	PF9292E-10	1
10A	DUY	SOCKET	PF9292E-10A	1
10B	AMPÜL	LAMP	PF9292E-10B	1
10C	LAMBA CAMI	LAMP GLASS	PF9292E-10C	1
11	ELEKTRİK MONTAJ PANOSU	ELECTRICAL MOUNTING PANEL	PF9292E-11	1
12	PANEL	PANEL	PF9292E-12	1
13	İÇ AYDINLATMA ANAHTARI	INTERIOR LIGHTING BUTTON	PF9292E-13	1
14	İÇ AYDINLATMA ANAHTARI KORUMASI	INTERIOR LIGHTING BUTTON PROTECTION	PF9292E-14	1
15	TERMOSTAT KONTROL LAMBASI	THERMOSTAT CONTROL LAMP	PF9292E-15	2
16	TERMOSTAT DÜĞMESİ	THERMOSTAT BUTTON	PF9292E-16	2
17	TERMOSTAT	THERMOSTAT	PF9292E-17	2
18	REZİSTANS	RESISTANCE	PF9292E-18	8
19	M6 KÖR SOMUN	M6 BLIND NUT	PF9292E-19	2
20	M6 DÜZ RONDELA	M6 FLAT WASHER	PF9292E-20	2
21	M6 YAYLI RONDELA	M6 SPRING WASHER	PF9292E-21	2
22	M6 İMBUS CİVATA	M6 IMBUS PIN BLOT	PF9292E-22	4
23	İZOLASYON	INSULATION	PF9292E-23	1
24	FIRIN AYAK	OVEN FOOT	PF9292E-24	5
25	İKİ FAZLI PAKO ŞALTER	TWO PHASE INTERRUPTION SWITCH	PF9292E-25	1
26	TERMOMETRE (PF 9292 E - T MODELİ İÇİN)	THERMOMETER (ONLY WITH PF 9292 E - T)	PF9292E-26	1
27	KONTAKTÖR	CONTACTOR	PF9292E-27	2

GMG CATERING EQUIPMENT	**ÜRÜN ADI / PRODUCT**	**TARİH / DATE**	**DETAY RESİM LİSTESİ** **DETAIL PICTURE LIST**
	PF 9292 E	13.08.2018	**SAYFA NO: 2 / 4** **PAGE NO.: 2 / 4**

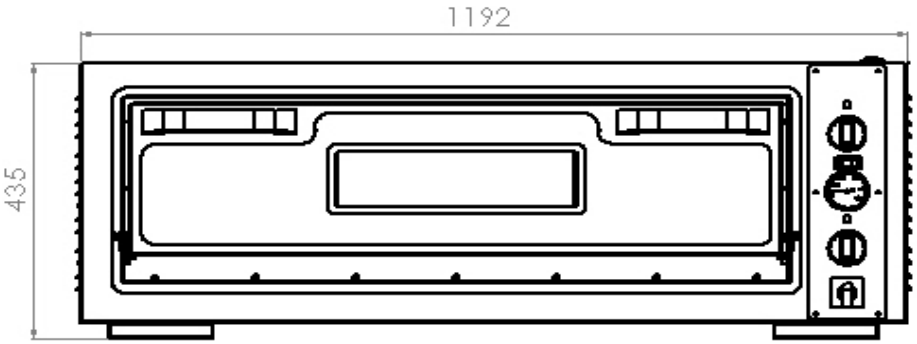

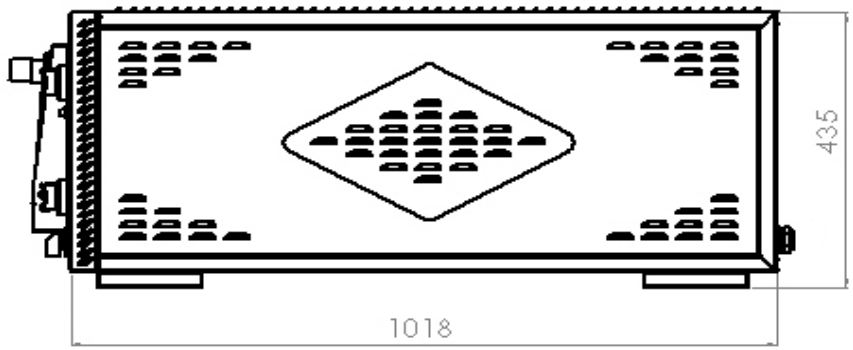

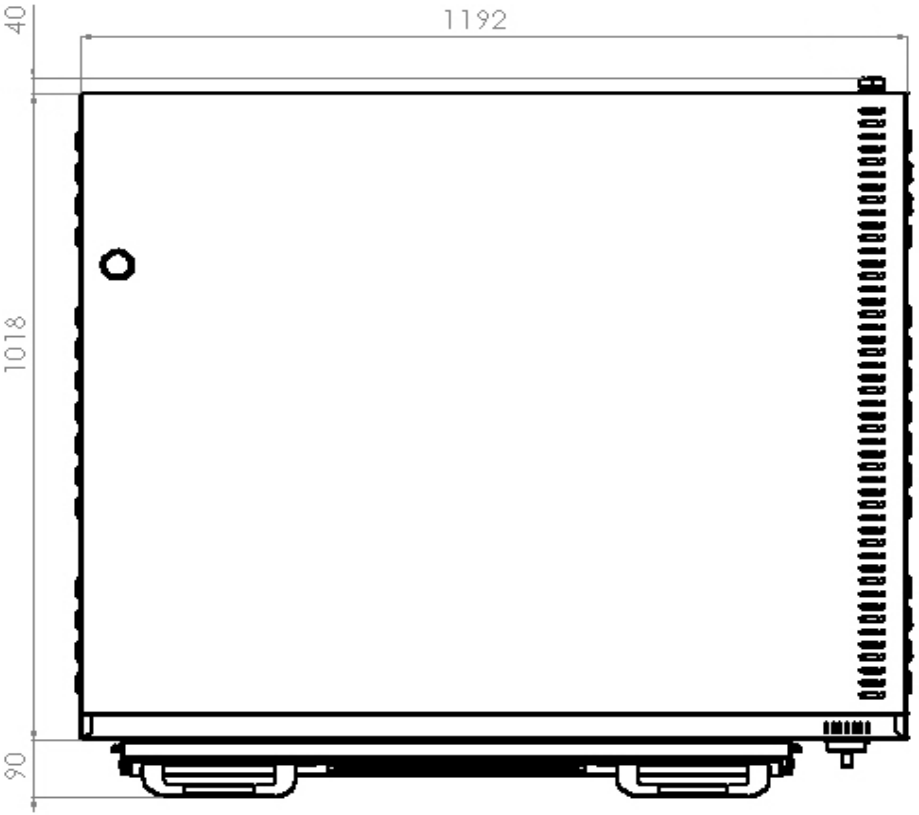

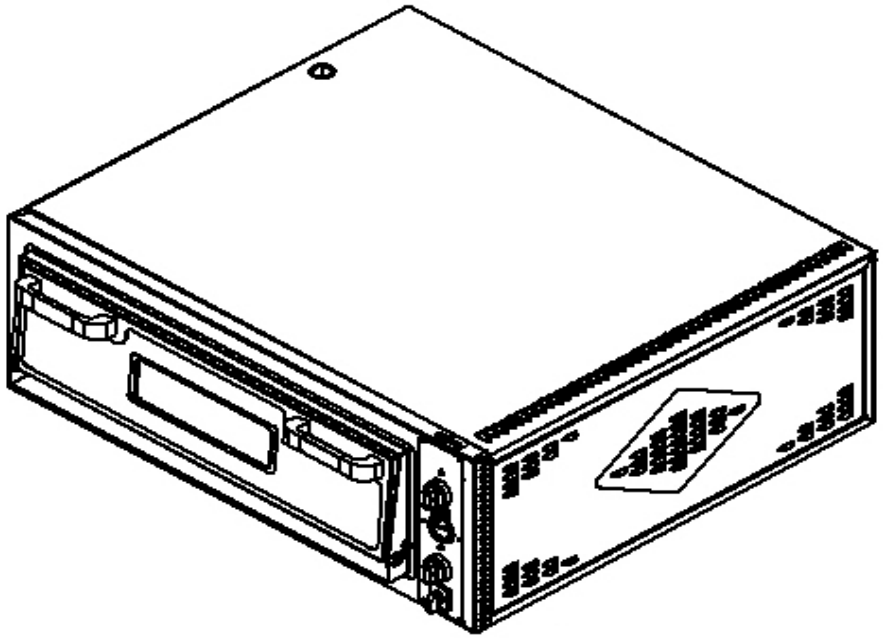

	ÜRÜN ADI / PRODUCT	TARİH / DATE	ÖLÇÜLENDİRME MEASUREMENTS
GMG CATERING EQUIPMENT	PF 9292 E	13.08.2018	SAYFA NO: 3 / 4 PAGE NO.: 3 / 4

PF 9292 E PİZZA FIRINI - ELEKTRİK ŞEMASI
PF 9292 E PIZZA OVEN - ELECTRICAL DIAGRAM

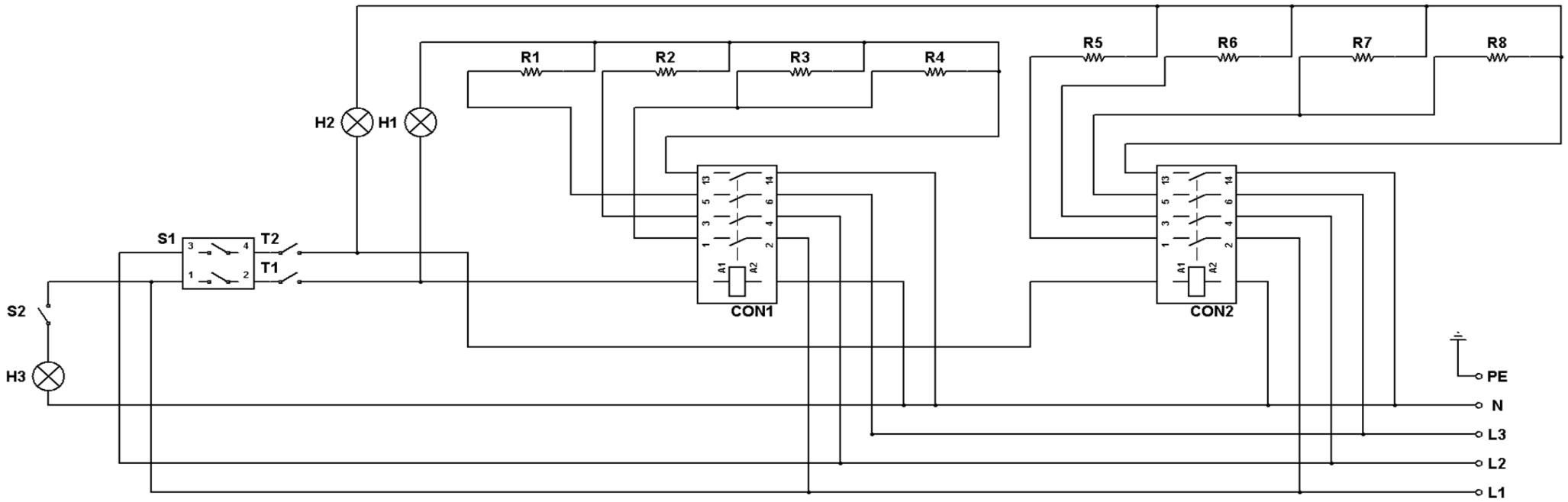

NO	AÇIKLAMA / DESCRIPTION	NO	AÇIKLAMA / DESCRIPTION	NO	AÇIKLAMA / DESCRIPTION	NO	AÇIKLAMA / DESCRIPTION	NO	AÇIKLAMA / DESCRIPTION	NO	AÇIKLAMA / DESCRIPTION	NO	AÇIKLAMA / DESCRIPTION
R1 ... R8	Rezistans / Resistance (1000 W)	T1 - T2	Termostat / Thermostat (85 - 455 °C)	H1 - H2	Termostat Kontrol Lambası Thermostat Control Lamp	S1	İki Fazlı Pako Şalter Two Phase Interruption Switch	H3	İç Aydınlatma Lambası Interior Lighting Lamp (25W)	S2	Aydınlatma Anahtarı Lighting Switch (T125 16A)	CON1 - CON2	Kontaktör / Contactor

GMG CATERING EQUIPMENT	**ÜRÜN ADI / PRODUCT**	**TARİH / DATE**	**ELEKTRİK ŞEMASI** **ELECTRICAL DIAGRAM**
	PF 9292 E	13.08.2018	**SAYFA NO: 4 / 4** **PAGE NO.: 4 / 4**