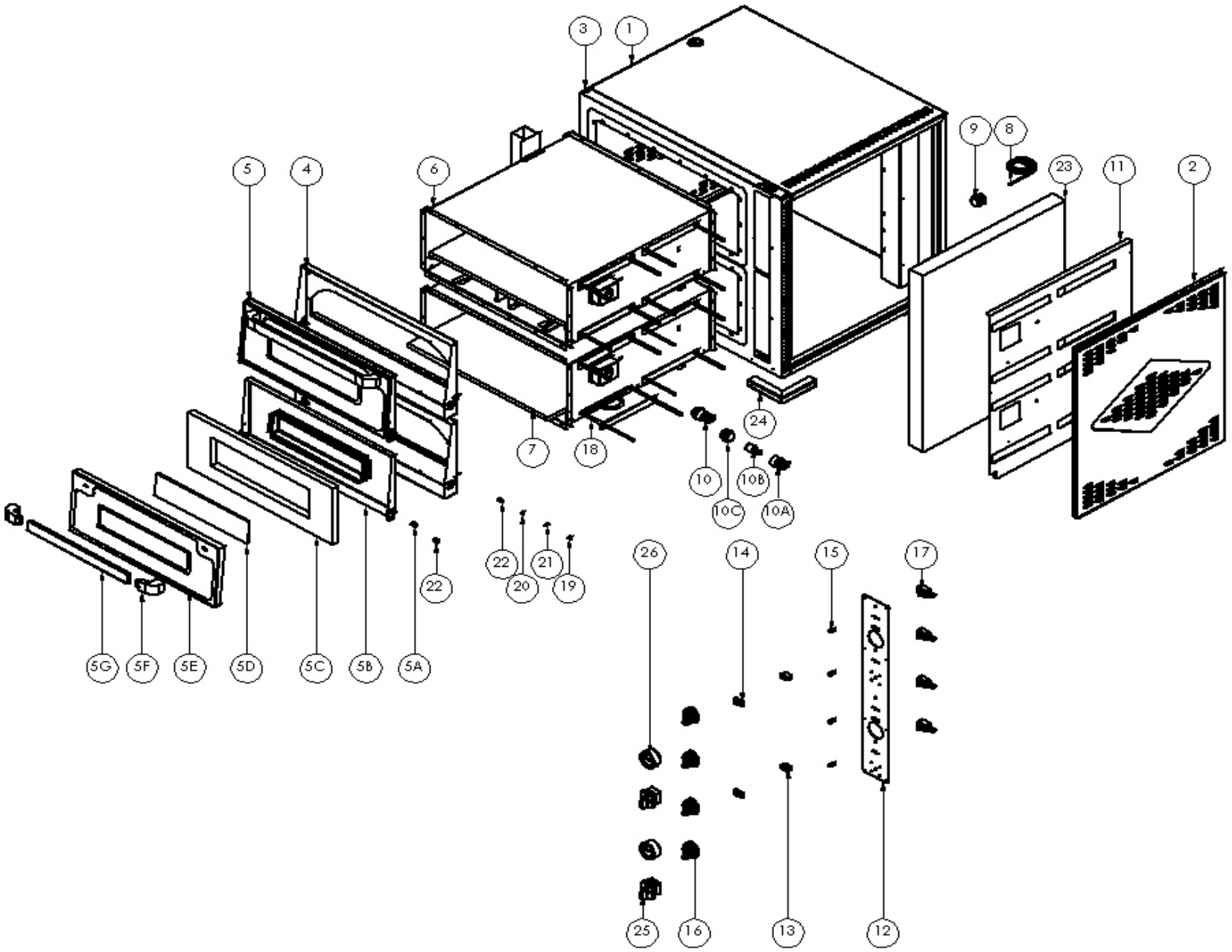

	ÜRÜN ADI / PRODUCT	TARİH / DATE	DETAY RESİM DETAIL PICTURE
GMG CATERING EQUIPMENT	PF 6262 DE	10.08.2018	SAYFA NO: 1 / 4 PAGE NO.: 1 / 4

PF 6262 DE



Dış Ölçüler	890 x 720 x 765 mm.	**Outside Dim.**	890 x 720 x 765 mm.
İç Ölçüler	2 x 620 x 620 x 150 mm.	**Inside Dim.**	2 x 620 x 620 x 150 mm.
Pişirme Alanı	2 x 4 ad. Ø 30 cm.	**Baking Arena**	2 x 4 pcs. Ø 30 cm.
Pişirme Taşı Ölçüleri	2 x 615 x 610 x 17 mm.	**Baking Stone Dim.**	2 x 615 x 610 x 17 mm.
Termostat Aralığı (°C)	85 - 455 °C (4 ad. Bağımsız)	**Thermostat Interval (°C)**	85 - 455 °C (4 pcs. Independent)
Aydınlatma	2 ad. 25 W.	**Illumination**	2 pcs. 25 W.
Toplam Elektrik Gücü (kW)	8 x 1,25 kW = 10 kW.	**Total Power (kW)**	8 x 1,25 kW = 10 kW.
Elektrik Bes. Gerilimi (V/A)	400 V 3F+N / 25 A.	**Power Supply Voltage (V/A)**	400 V 3F+N / 25 A.
Besleme Kablosu	5 x 4 H07RN-F	**Power Supply Cable**	5 x 4 H07RN-F
İç Tesisat Kabloları	SİAF 2,5 mm²	**Internal Cable**	SİAF 2,5 mm²
İzolasyon	Taş Yünü	**Insulatıon**	Rock Wool
Ağırlık	119 kg.	**Weight**	119 kg.

NO.	AÇIKLAMA	DESCRIPTION	ÜRÜN NO. / ITEM NO	ADET / PCS.
1	GÖVDE	MAIN BODY	YM0197	1
2	YAN KAPAK	SIDE COVER	YM0198	2
3	ÖN PASLANMAZ ÇERÇEVE	FRONT STAINLESS FRAME	YM0201	1
4	EMAYE ÇERÇEVE	ENAMEL FRAME	YM0195	2
5	FIRIN ÖN KAPAK	OVEN FRONT COVER	YM0350	2
5A	M8 İMBUS CIVATA	M8 IMBUS PIN BOLT	HM0864	4
5B	EMAYE KAPAK	ENAMEL COVER	YM0194	2
5C	KAPAK İZOLASYONU	COVER ISOLATION	HM0029	2
5D	GÖZETLEME CAMI	SIGHT GLASS	HM0304	2
5E	PASLANMAZ KAPAK	STAINLESS COVER	YM0193	2
5F	BAKALİT	BAKELITE	HM0297	4
5G	ALÜMİNYUM KOL	ALUMINUM ARM	HM0291	2
6	PİŞİRME KAZANI	COOKING BOILER	YM0349	2
7	PİŞİRME TAŞI	COOKING STONE	HM0485	2
8	BESLEME KABLOSU	FEEDING CABLE	HM0082	1
9	RAKOR	FEEDING CABLE SOCKET	HM0006	1
10	İÇ AYDINLATMA LAMBASI	INTERIOR LIGHTING LAMP	HM0020	2
10A	DUY	SOCKET	------	2
10B	AMPÜL	LAMP	HM0019	2
10C	LAMBA CAMI	LAMP GLASS	HM0649	2
11	ELEKTRİK MONTAJ PANOSU	ELECTRICAL MOUNTING PANEL	YM0200	1
12	PANEL	PANEL	YM1301	1
13	İÇ AYDINLATMA ANAHTARI	INTERIOR LIGHTING BUTTON	HM0016	2
14	İÇ AYDINLATMA ANAHTARI KORUMASI	INTERIOR LIGHTING BUTTON PROTECTION	HM0773	2
15	TERMOSTAT KONTROL LAMBASI	THERMOSTAT CONTROL LAMP	HM1999	4
16	TERMOSTAT DÜĞMESİ	THERMOSTAT BUTTON	HM0293	4
17	TERMOSTAT	THERMOSTAT	HM0022	4
18	REZİSTANS	RESISTANCE	HM0039	8
19	M6 KÖR SOMUN	M6 BLIND NUT	HM0147	4
20	M6 DÜZ RONDELA	M6 FLAT WASHER	HM0258	4
21	M6 YAYLI RONDELA	M6 SPRING WASHER	HM0223	4
22	M6 İMBUS CIVATA	M6 IMBUS PIN BLOT	HM0088	8
23	İZOLASYON	INSULATION	------	1
24	FIRIN AYAK	OVEN FOOT	YM1119	4
25	İKİ FAZLI PAKO ŞALTER	TWO PHASE INTERRUPTION SWITCH	HM0008	2
26	TERMOMETRE (PF 6262 DE - T MODELİ İÇİN)	THERMOMETER (ONLY WITH PF 6262 DE - T)	HM0024	2

GMG CATERING EQUIPMENT	**ÜRÜN ADI / PRODUCT**	**TARİH / DATE**	**DETAY RESİM LİSTESİ** **DETAIL PICTURE LIST**
	PF 6262 DE	10.08.2018	**SAYFA NO: 2 / 4** **PAGE NO.: 2 / 4**

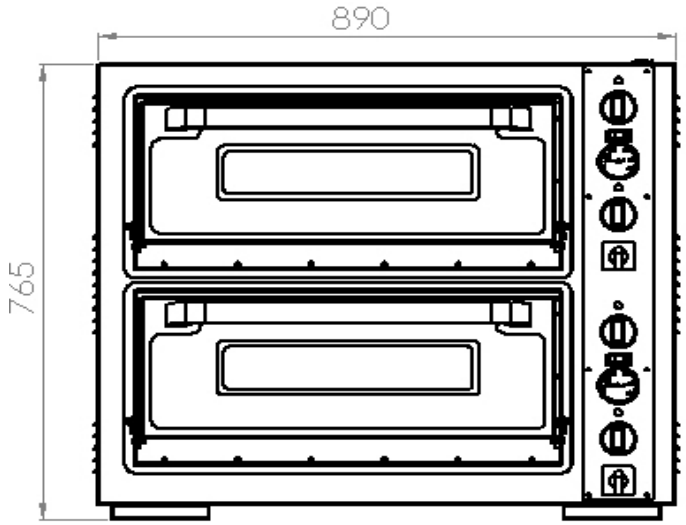

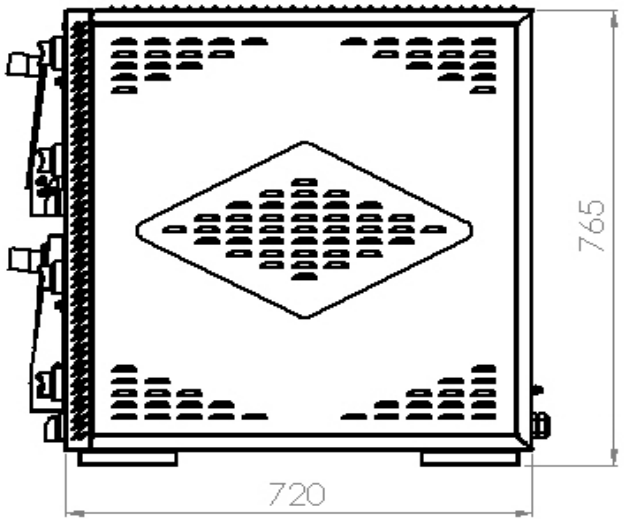

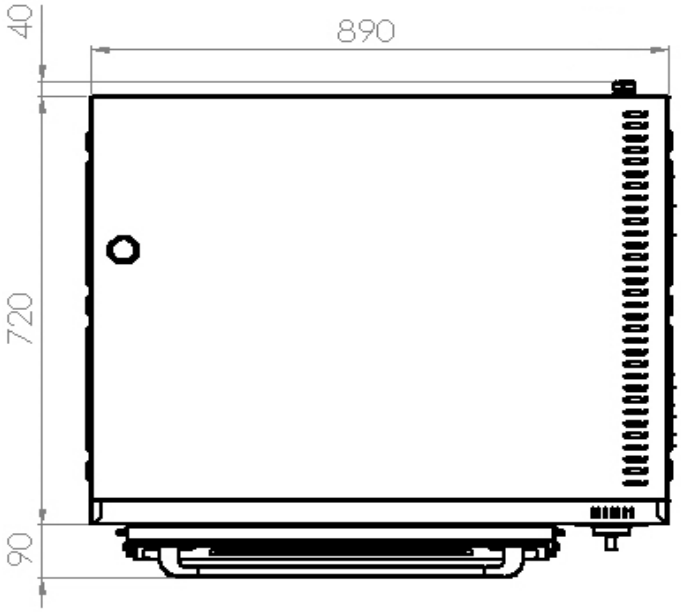

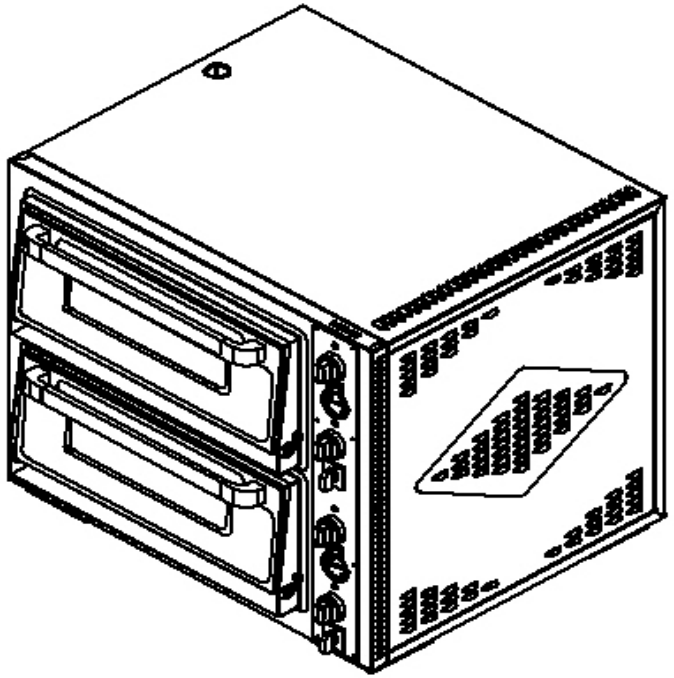

	ÜRÜN ADI / PRODUCT	TARİH / DATE	ÖLÇÜLENDİRME MEASUREMENTS
GMG CATERING EQUIPMENT	PF 6262 DE	10.08.2018	SAYFA NO: 3 / 4 PAGE NO.: 3 / 4

PF 6262 DE PİZZA FIRINI - ELEKTRİK ŞEMASI
PF 6262 DE PIZZA OVEN - ELECTRICAL DIAGRAM

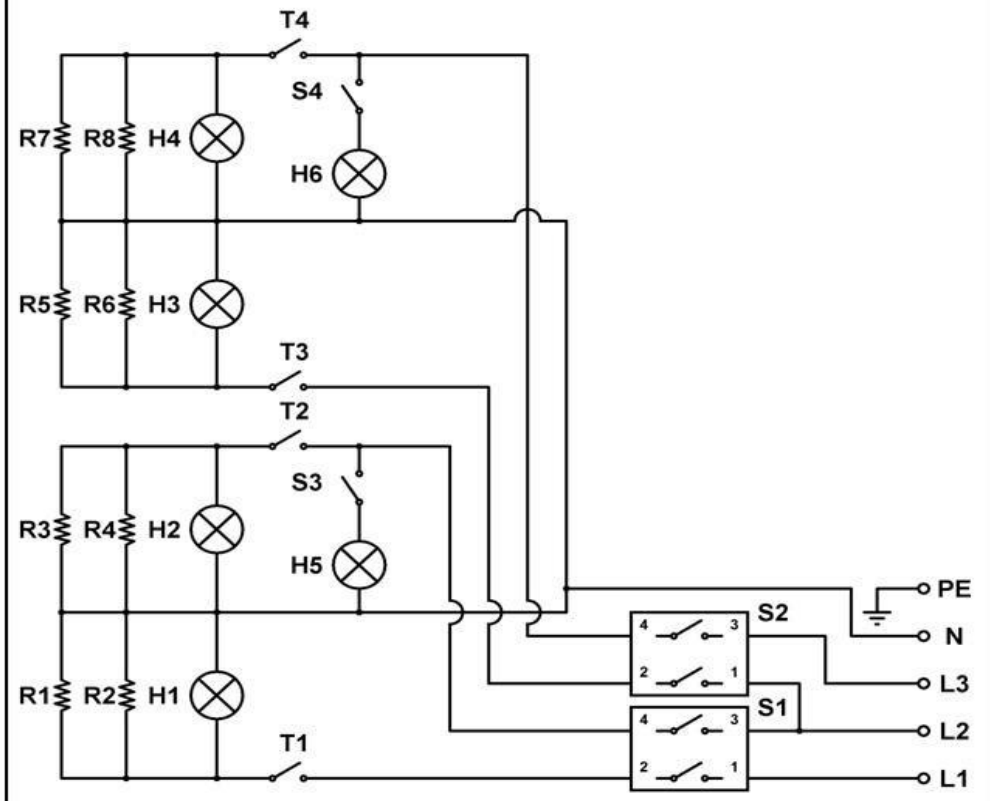

NO	AÇIKLAMA / DESCRIPTION	NO	AÇIKLAMA / DESCRIPTION
R1 ... R8	Rezistans / Resistance (1250 W)	T1 - T2 - T3 - T4	Termostat / Thermostat (85 - 455 °C)
H1 - H2 - H3 - H4	Termostat Kontrol Lambası Thermostat Control Lamp	S1 - S2	İki Fazlı Pako Şalter Two Phase Interruption Switch
H5 - H6	İç Aydınlatma Lambası Interior Lighting Lamp (25W)	S3 - S4	Aydınlatma Anahtarı Lighting Switch (T125 16A)

	ÜRÜN ADI / PRODUCT	TARİH / DATE	ELEKTRİK ŞEMASI ELECTRICAL DIAGRAM
GMG CATERING EQUIPMENT	PF 6262 DE	10.08.2018	SAYFA NO: 4 / 4 PAGE NO.: 4 / 4