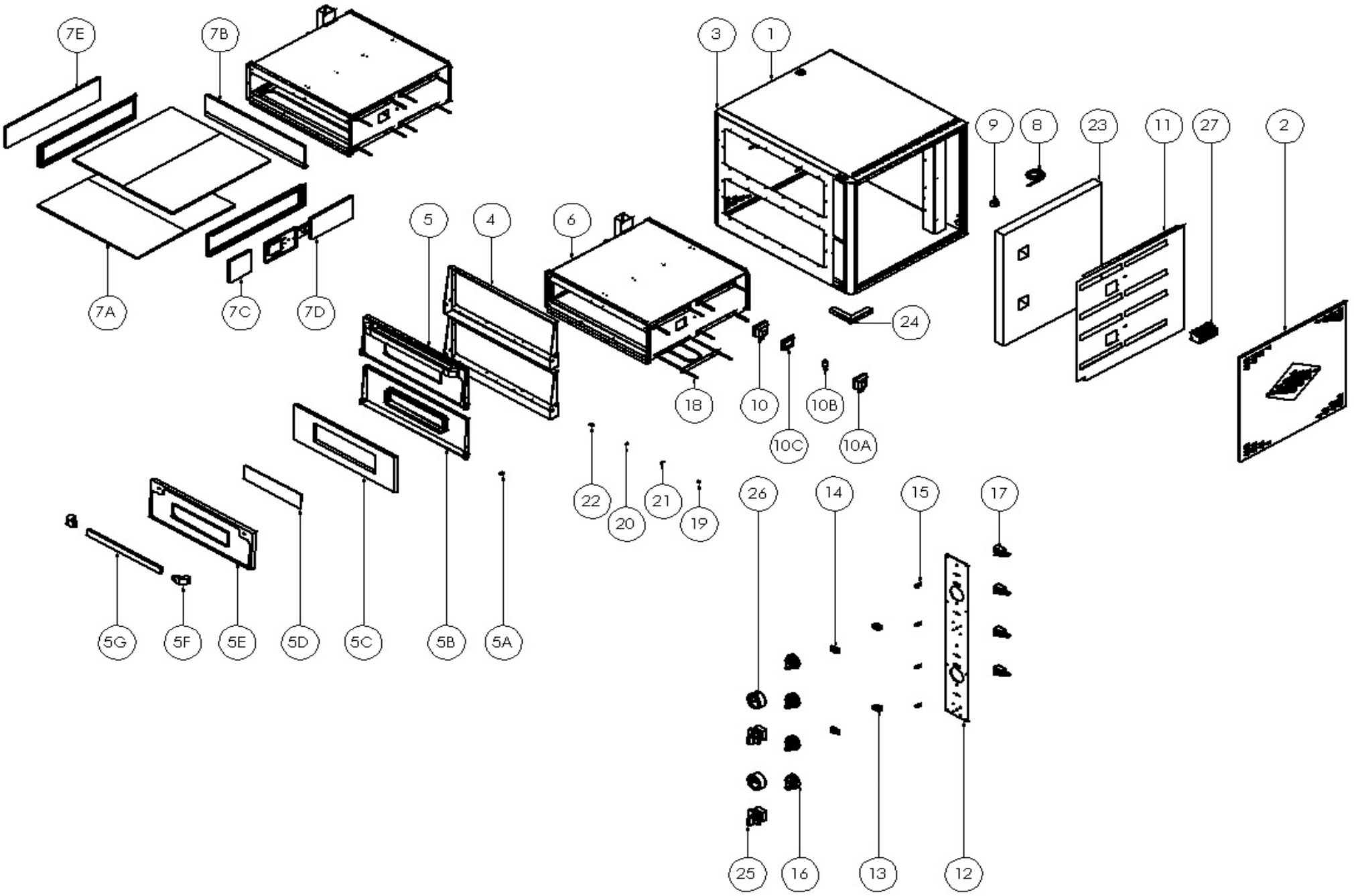

GMG CATERING EQUIPMENT	**ÜRÜN ADI / PRODUCT**	**TARİH / DATE**	**DETAY RESİM** **DETAIL PICTURE**
	PF 7070 L	13.08.2018	**SAYFA NO: 1 / 4** **PAGE NO.: 1 / 4**

PF 7070 L



Dış Ölçüler	970 x 823 x 765 mm.	**Outside Dim.**	970 x 823 x 765 mm.
İç Ölçüler	2 x 670 x 680 x 150 mm.	**Inside Dim.**	2 x 670 x 680 x 150 mm.
Pişirme Alanı	2 x 4 ad. Ø 33 cm.	**Baking Arena**	2 x 4 ad. Ø 33 cm.
Pişirme Taşı Ölçüleri	8 x 695 x 345 x 14 mm.	**Baking Stone Dim.**	8 x 695 x 345 x 14 mm.
	2 x 695 x 140 x 14 mm.		2 x 695 x 140 x 14 mm.
	4 x 660 x 140 x 14 mm.		4 x 660 x 140 x 14 mm.
	2 x 305 x 140 x 14 mm.		2 x 305 x 140 x 14 mm.
	2 x 140 x 140 x 14 mm.		2 x 140 x 140 x 14 mm.
Termostat Aralığı (°C)	85 - 455 °C (4 ad. Bağımsız)	**Thermostat Interval (°C)**	85 - 455 °C (4 pcs. Independent)
Aydınlatma	2 ad. 25 W.	**Illumination**	2 pcs. 25 W.
Toplam Elektrik Gücü (kW)	8 x 1,25 kW = 10 kW.	**Total Power (kW)**	8 x 1,25 kW = 10 kW.
Elektrik Besleme Gerilimi (V/A)	400 V 3F+N / 3 x 27 A.	**Power Supply Voltage (V/A)**	400 V 3F+N / 3 x 27 A.
Besleme Kablosu	5 x 4 H07RN-F	**Power Supply Cable**	5 x 4 H07RN-F
İç Tesisat Kabloları	SİAF 2,5 mm²	**Internal Cable**	SİAF 2,5 mm²
İzolasyon	Taş Yünü	**Insulatıon**	Rock Wool
Ağırlık	185 kg.	**Weight**	185 kg.

NO.	AÇIKLAMA	DESCRIPTION	ÜRÜN NO. / ITEM NO	ADET / PCS.
1	GÖVDE	MAIN BODY	PF7070L-01	1
2	YAN KAPAK	SIDE COVER	PF7070L-02	2
3	ÖN PASLANMAZ ÇERCEVE	FRONT STAINLESS FRAME	PF7070L-03	1
4	EMAYE ÇERCEVE	ENAMEL FRAME	PF7070L-04	2
5	FIRIN ÖN KAPAK	OVEN FRONT COVER	PF7070L-05	2
5A	M8 İMBUS CİVATA	M8 IMBUS PIN BOLT	PF7070L-05A	4
5B	EMAYE KAPAK	ENAMEL COVER	PF7070L-05B	2
5C	KAPAK İZOLASYONU	COVER ISOLATION	PF7070L-05C	2
5D	GÖZETLEME CAMI	SIGHT GLASS	PF7070L-05D	2
5E	PASLANMAZ KAPAK	STAINLESS COVER	PF7070L-05E	2
5F	BAKALİT	BAKELITE	PF7070L-05F	4
5G	ALÜMİNYUM KOL	ALUMINUM ARM	PF7070L-05G	2
6	PİŞİRME KAZANI	COOKING BOILER	PF7070L-06	2
7A	KAZAN ALT VE ÜST TAŞ	BOILER SUB AND TOP STONE	PF7070L-07A	8
7B	KAZAN ARKA TAŞ	BOILER BACK STONE	PF7070L-07B	2
7C	KAZAN SAĞ ÖN TAŞ	BOILER RIGHT FRONT STONE	PF7070L-07C	2
7D	KAZAN SAĞ ARKA TAŞ	BOILER RIGHT BACK STONE	PF7070L-07D	2
7E	KAZAN SOL TAŞ	BOILER LEFT STONE	PF7070L-07E	2
8	BESLEME KABLOSU	FEEDING CABLE	PF7070L-08	1
9	RAKOR	FEEDING CABLE SOCKET	PF7070L-09	1
10	İÇ AYDINLATMA LAMBASI	INTERIOR LIGHTING LAMP	PF7070L-10	2
10A	DUY	SOCKET	PF7070L-10A	2
10B	AMPÜL	LAMP	PF7070L-10B	2
10C	LAMBA CAMI	LAMP GLASS	PF7070L-10C	2
11	ELEKTRİK MONTAJ PANOSU	ELECTRICAL MOUNTING PANEL	PF7070L-11	1
12	PANEL	PANEL	PF7070L-12	1
13	İÇ AYDINLATMA ANAHTARI	INTERIOR LIGHTING BUTTON	PF7070L-13	2
14	İÇ AYDINLATMA ANAHTARI KORUMASI	INTERIOR LIGHTING BUTTON PROTECTION	PF7070L-14	2
15	TERMOSTAT KONTROL LAMBASI	THERMOSTAT CONTROL LAMP	PF7070L-15	4
16	TERMOSTAT DÜĞMESİ	THERMOSTAT BUTTON	PF7070L-16	4
17	TERMOSTAT	THERMOSTAT	PF7070L-17	4
18	REZİSTANS	RESISTANCE	PF7070L-18	8
19	M6 KÖR SOMUN	M6 BLIND NUT	PF7070L-19	4
20	M6 DÜZ RONDELA	M6 FLAT WASHER	PF7070L-20	4
21	M6 YAYLI RONDELA	M6 SPRING WASHER	PF7070L-21	4
22	M6 İMBUS CİVATA	M6 IMBUS PIN BLOT	PF7070L-22	4
23	İZOLASYON	INSULATION	PF7070L-23	1
24	FIRIN AYAK	OVEN FOOT	PF7070L-24	4
25	İKİ FAZLI PAKO ŞALTER	TWO PHASE INTERRUPTION SWITCH	PF7070L-25	2
26	TERMOMETRE	THERMOMETER	PF7070L-26	2
27	KONTAKTÖR	CONTACTOR	PF7070L-27	4

GMG CATERING EQUIPMENT	**ÜRÜN ADI / PRODUCT**	**TARİH / DATE**
	PF 7070 L	13.08.2018

DETAY RESİM LİSTESİ
DETAIL PICTURE LIST

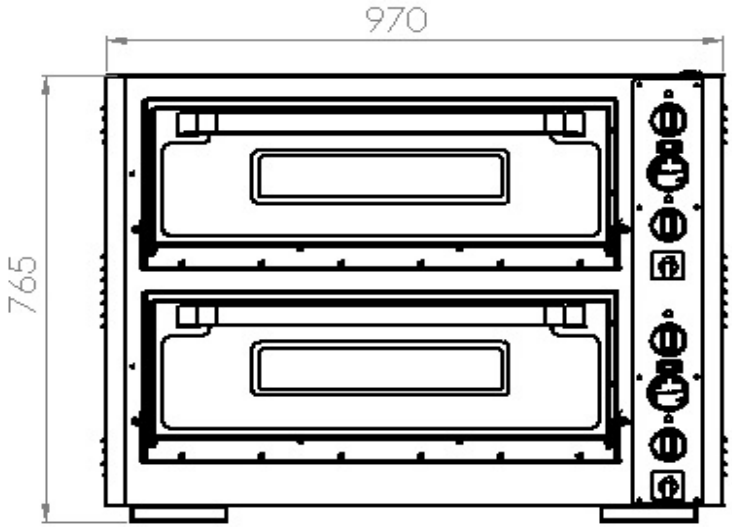

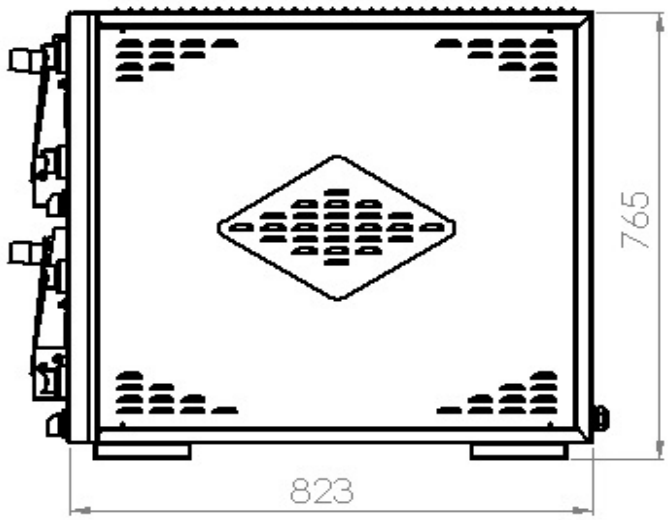

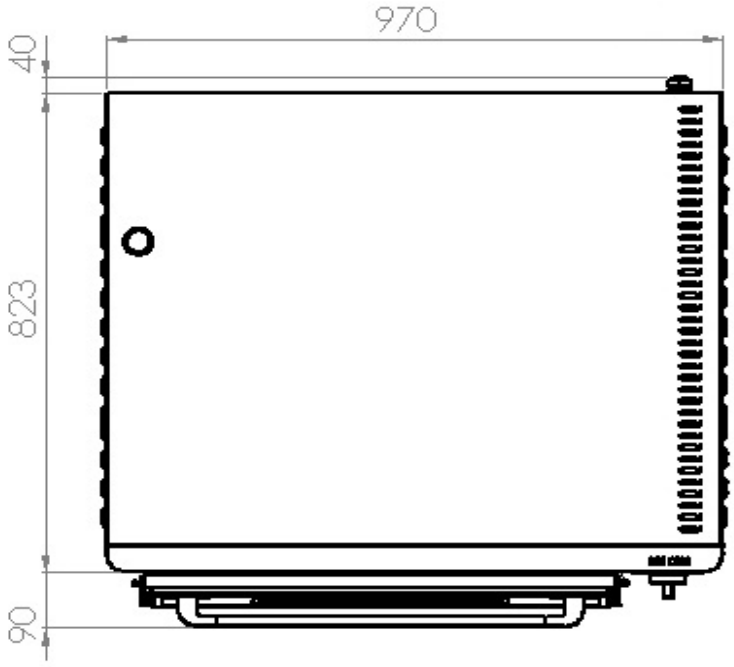

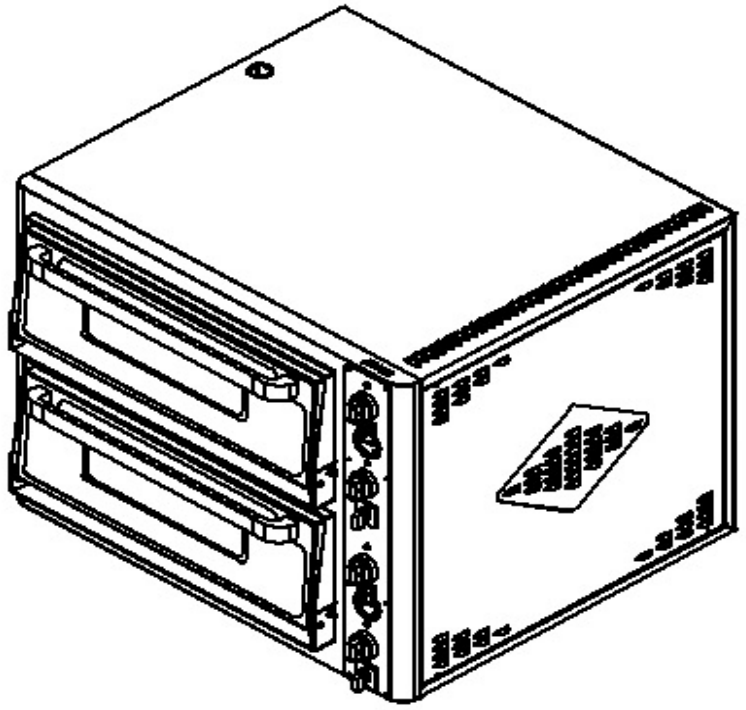

GMG CATERING EQUIPMENT	**ÜRÜN ADI / PRODUCT**	**TARİH / DATE**	**ÖLÇÜLENDİRME MEASUREMENTS**
	PF 7070 L	13.08.2018	**SAYFA NO: 3 / 4** **PAGE NO.: 3 / 4**

PF 7070 L PİZZA FIRINI - ELEKTRİK ŞEMASI
PF 7070 L PIZZA OVEN - ELECTRICAL DIAGRAM

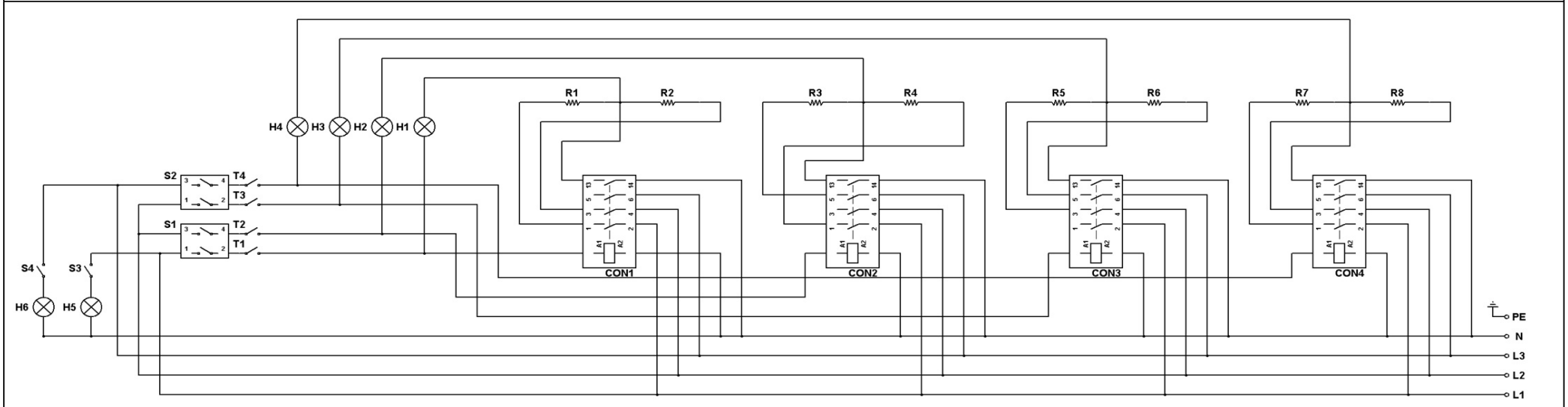

NO	AÇIKLAMA / DESCRIPTION	NO	AÇIKLAMA / DESCRIPTION	NO	AÇIKLAMA / DESCRIPTION	NO	AÇIKLAMA / DESCRIPTION	NO	AÇIKLAMA / DESCRIPTION	NO	AÇIKLAMA / DESCRIPTION	NO	AÇIKLAMA / DESCRIPTION
R1 ... R8	Rezistans / Resistance (1250 W)	T1 - T2 - T3 - T4	Termostat / Thermostat (85 - 455 °C)	H1 - H2 - H3 - H4	Termostat Kontrol Lambası Thermostat Control Lamp	S1 - S2	İki Fazlı Pako Şalter Two Phase Interruption Switch	H5 - H6	İç Aydınlatma Lambası Interior Lighting Lamp (25W)	S3 - S4	Aydınlatma Anahtarı Lighting Switch (T125 16A)	CON1 ... CON4	Kontaktör / Contactor

CATERING EQUIPMENT	**ÜRÜN ADI / PRODUCT**	**TARİH / DATE**	**ELEKTRİK ŞEMASI** **ELECTRICAL DIAGRAM**
	PF 7070 L	13.08.2018	**SAYFA NO: 4 / 4** **PAGE NO.: 4 / 4**