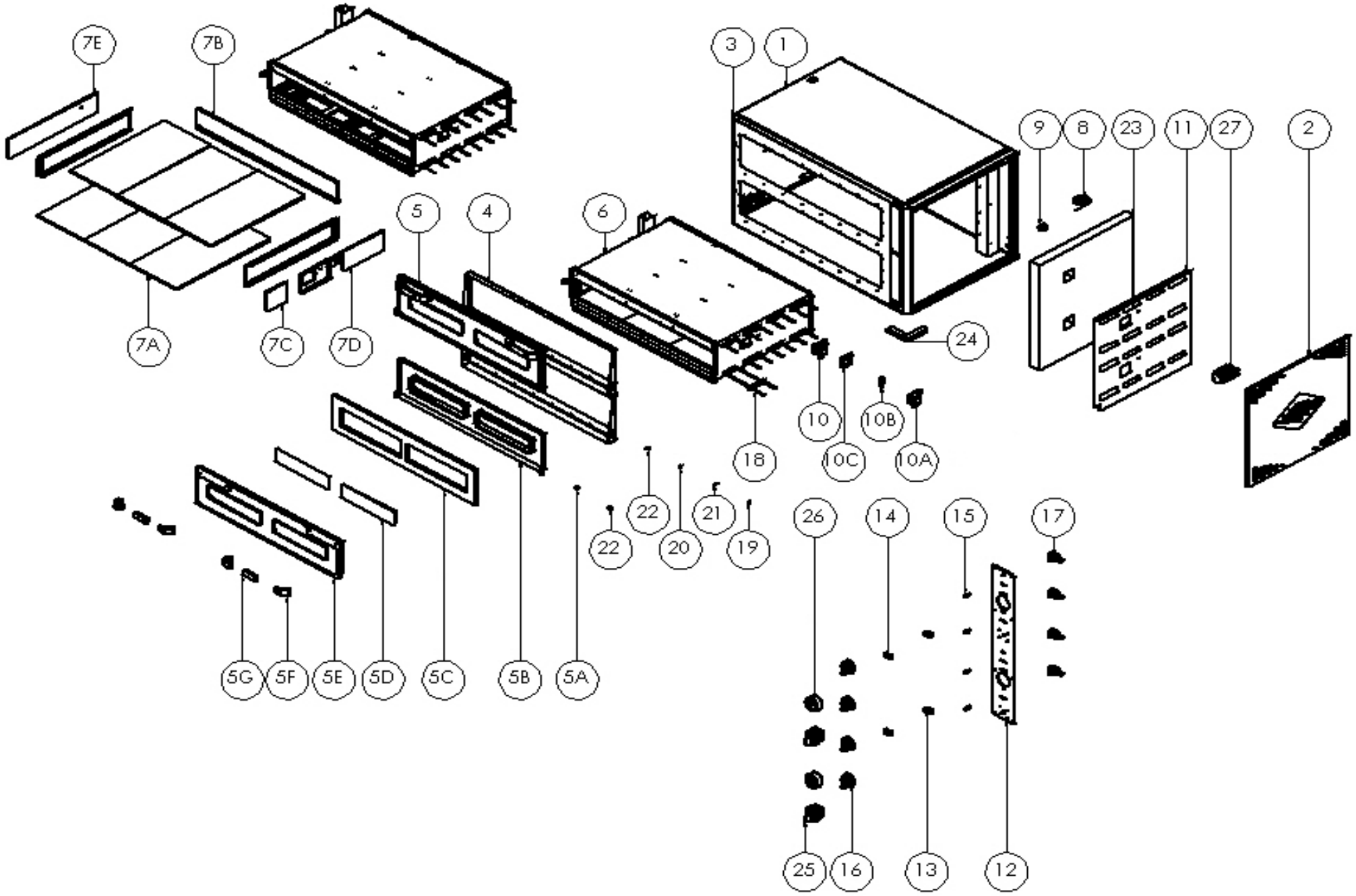

GMG CATERING EQUIPMENT	**ÜRÜN ADI / PRODUCT**	**TARİH / DATE**	**DETAY RESİM** **DETAIL PICTURE**
	PF 10570 L	13.08.2018	**SAYFA NO: 1 / 4** **PAGE NO.: 1 / 4**

PF 10570 L



Dış Ölçüler	1320 x 820 x 765 mm.	**Outside Dim.**	1320 x 820 x 765 mm.
İç Ölçüler	2 x 1015 x 695 x 150 mm.	**Inside Dim.**	2 x 1015 x 695 x 150 mm.
Pişirme Alanı	2 x 6 ad. Ø 33 cm.	**Baking Arena**	2 x 6 pcs. Ø 33 cm.
Pişirme Taşı Ölçüleri	12 x 695 x 345 x 14 mm.	**Baking Stone Dim.**	12 x 695 x 345 x 14 mm.
	2 x 660 x 140 x 14 mm.		2 x 660 x 140 x 14 mm.
	4 x 520 x 140 x 14 mm.		4 x 520 x 140 x 14 mm.
	2 x 295 x 140 x 14 mm.		2 x 295 x 140 x 14 mm.
	2 x 150 x 140 x 14 mm.		2 x 150 x 140 x 14 mm.
Termostat Aralığı (°C)	85 - 455 °C (4 ad. Bağımsız)	**Thermostat Interval (°C)**	85 - 455 °C (4 pcs. Independent)
Aydınlatma	2 ad. 25 W.	**Illumination**	2 pcs. 25 W.
Toplam Elektrik Gücü (kW)	16 x 1 kW = 16 kW.	**Total Power (kW)**	16 x 1 kW = 16 kW.
Elektrik Besleme Gerilimi (V/A)	400 V 3F+N / 3 x 43 A.	**Power Supply Voltage (V/A)**	400 V 3F+N / 3 x 43 A.
Besleme Kablosu	5 x 4 H07RN-F	**Power Supply Cable**	5 x 4 H07RN-F
İç Tesisat Kabloları	SİAF 2,5 mm²	**Internal Cable**	SİAF 2,5 mm²
İzolasyon	Taş Yünü	**Insulatıon**	Rock Wool
Ağırlık	282 kg.	**Weight**	282 kg.

NO.	AÇIKLAMA	DESCRIPTION	ÜRÜN NO. / ITEM NO	ADET / PCS.
1	GÖVDE	MAIN BODY	PF10570L-01	1
2	YAN KAPAK	SIDE COVER	PF10570L-02	2
3	ÖN PASLANMAZ ÇERCEVE	FRONT STAINLESS FRAME	PF10570L-03	1
4	EMAYE ÇERCEVE	ENAMEL FRAME	PF10570L-04	2
5	FIRIN ÖN KAPAK	OVEN FRONT COVER	PF10570L-05	2
5A	M8 İMBUS CİVATA	M8 IMBUS PIN BOLT	PF10570L-05A	4
5B	EMAYE KAPAK	ENAMEL COVER	PF10570L-05B	2
5C	KAPAK İZOLASYONU	COVER ISOLATION	PF10570L-05C	2
5D	GÖZETLEME CAMI	SIGHT GLASS	PF10570L-05D	4
5E	PASLANMAZ KAPAK	STAINLESS COVER	PF10570L-05E	2
5F	BAKALİT	BAKELITE	PF10570L-05F	8
5G	ALÜMİNYUM KOL	ALUMINUM ARM	PF10570L-05G	4
6	PİŞİRME KAZANI	COOKING BOILER	PF10570L-06	2
7A	KAZAN ALT VE ÜST TAŞ	BOILER SUB AND TOP STONE	PF10570L-07A	12
7B	KAZAN ARKA TAŞ	BOILER BACK STONE	PF10570L-07B	2
7C	KAZAN SAĞ ÖN TAŞ	BOILER RIGHT FRONT STONE	PF10570L-07C	2
7D	KAZAN SAĞ ARKA TAŞ	BOILER RIGHT BACK STONE	PF10570L-07D	2
7E	KAZAN SOL TAŞ	BOILER LEFT STONE	PF10570L-07E	2
8	BESLEME KABLOSU	FEEDING CABLE	PF10570L-08	1
9	RAKOR	FEEDING CABLE SOCKET	PF10570L-09	1
10	İÇ AYDINLATMA LAMBASI	INTERIOR LIGHTING LAMP	PF10570L-10	2
10A	DUY	SOCKET	PF10570L-10A	2
10B	AMPÜL	LAMP	PF10570L-10B	2
10C	LAMBA CAMI	LAMP GLASS	PF10570L-10C	2
11	ELEKTRİK MONTAJ PANOSU	ELECTRICAL MOUNTING PANEL	PF10570L-11	1
12	PANEL	PANEL	PF10570L-12	1
13	İÇ AYDINLATMA ANAHTARI	INTERIOR LIGHTING BUTTON	PF10570L-13	2
14	İÇ AYDINLATMA ANAHTARI KORUMASI	INTERIOR LIGHTING BUTTON PROTECTION	PF10570L-14	2
15	TERMOSTAT KONTROL LAMBASI	THERMOSTAT CONTROL LAMP	PF10570L-15	4
16	TERMOSTAT DÜĞMESİ	THERMOSTAT BUTTON	PF10570L-16	4
17	TERMOSTAT	THERMOSTAT	PF10570L-17	4
18	REZİSTANS	RESISTANCE	PF10570L-18	16
19	M6 KÖR SOMUN	M6 BLIND NUT	PF10570L-19	4
20	M6 DÜZ RONDELA	M6 FLAT WASHER	PF10570L-20	4
21	M6 YAYLI RONDELA	M6 SPRING WASHER	PF10570L-21	4
22	M6 İMBUS CİVATA	M6 IMBUS PIN BLOT	PF10570L-22	8
23	İZOLASYON	INSULATION	PF10570L-23	1
24	FIRIN AYAK	OVEN FOOT	PF10570L-24	5
25	İKİ FAZLI PAKO ŞALTER	TWO PHASE INTERRUPTION SWITCH	PF10570L-25	2
26	TERMOMETRE	THERMOMETER	PF10570L-26	2
27	KONTAKTÖR	CONTACTOR	PF10570L-27	4

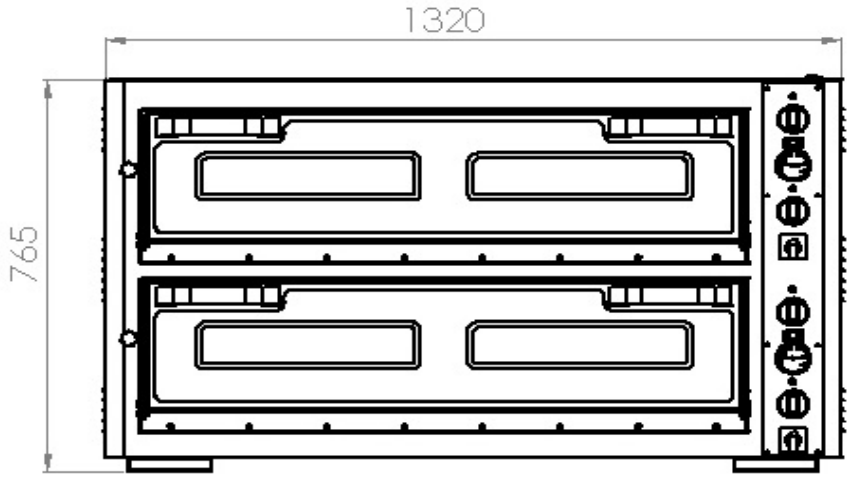

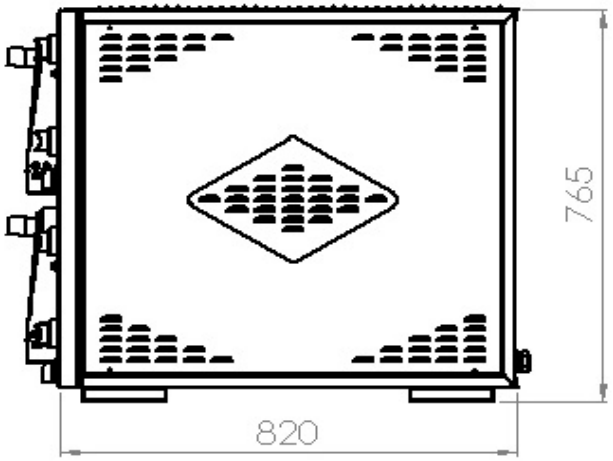

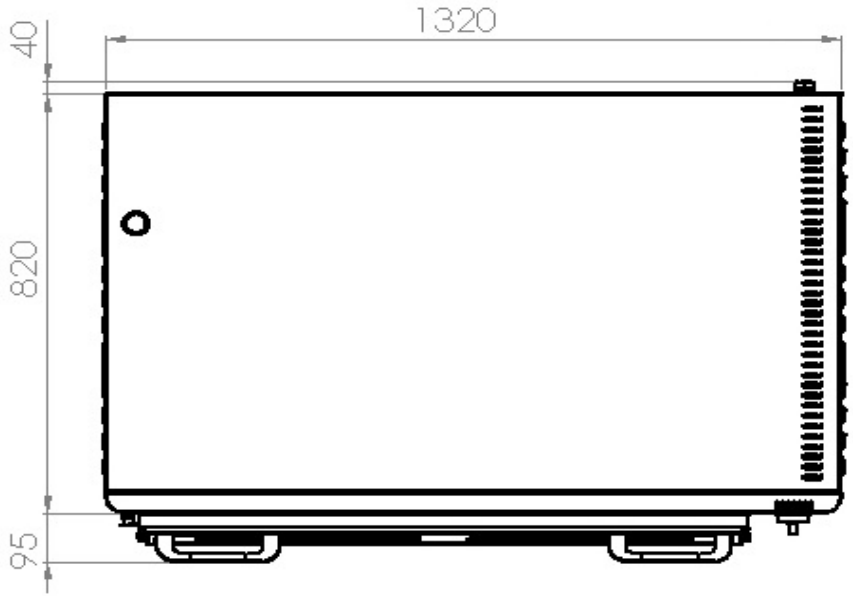

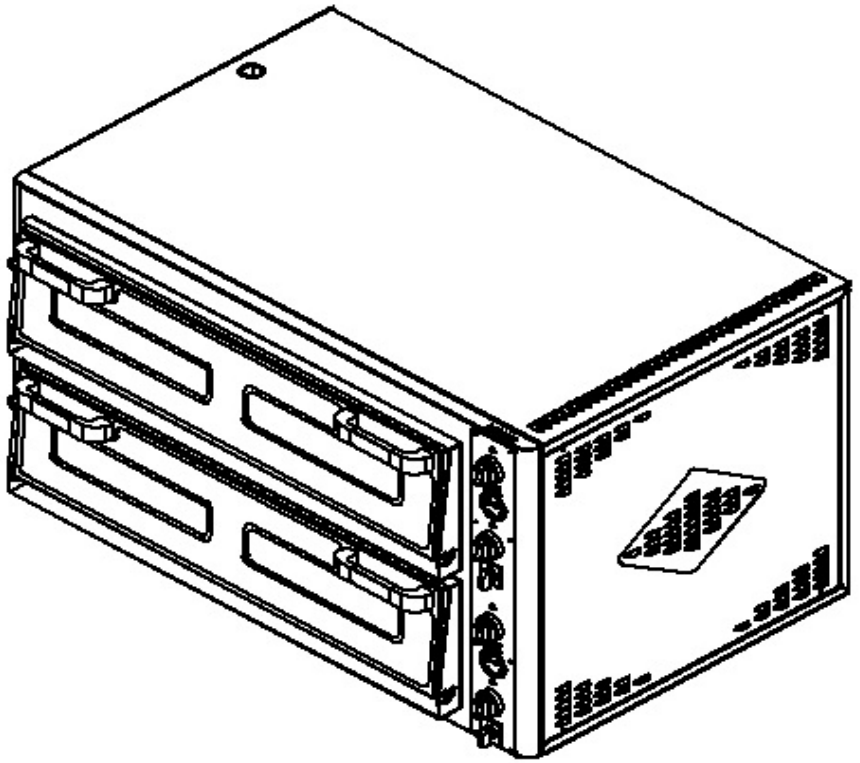

GMG CATERING EQUIPMENT	**ÜRÜN ADI / PRODUCT**	**TARİH / DATE**	**ÖLÇÜLENDİRME MEASUREMENTS**
	PF 10570 L	13.08.2018	**SAYFA NO: 3 / 4 PAGE NO.: 3 / 4**

PF 10570 L PİZZA FIRINI - ELEKTRİK ŞEMASI
PF 10570 L PIZZA OVEN - ELECTRICAL DIAGRAM

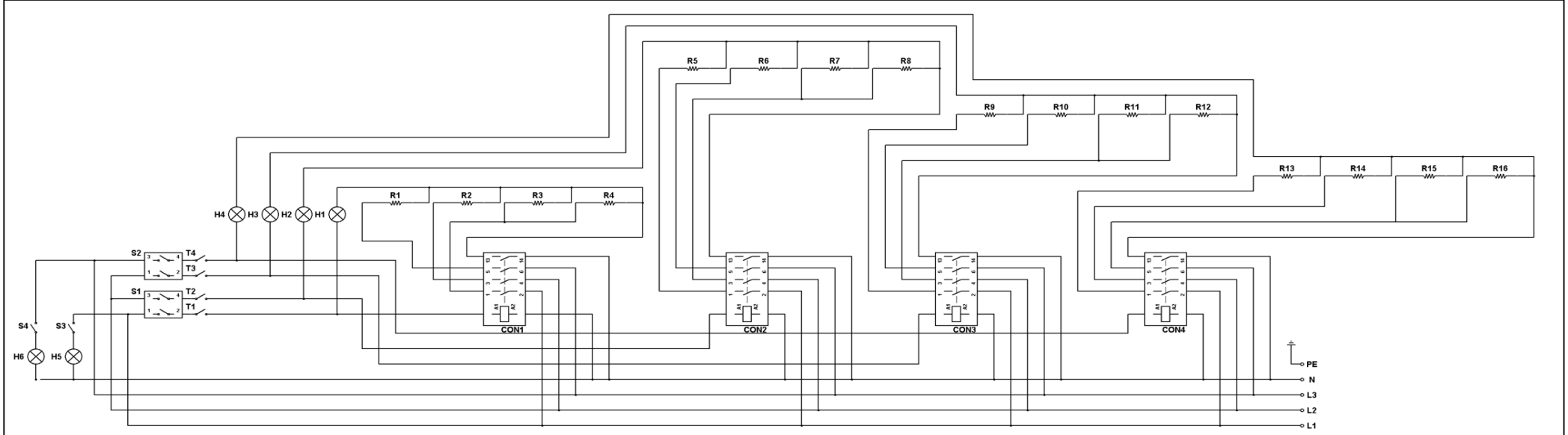

NO	AÇIKLAMA / DESCRIPTION	NO	AÇIKLAMA / DESCRIPTION	NO	AÇIKLAMA / DESCRIPTION	NO	AÇIKLAMA / DESCRIPTION	NO	AÇIKLAMA / DESCRIPTION	NO	AÇIKLAMA / DESCRIPTION	NO	AÇIKLAMA / DESCRIPTION
R1 ... R16	Rezistans / Resistance (1000 W)	T1 - T2 - T3 - T4	Termostat / Thermostat (85 - 455 °C)	H1 - H2 - H3 - H4	Termostat Kontrol Lambası Thermostat Control Lamp	S1 - S2	İki Fazlı Pako Şalter Two Phase Interruption Switch	H5 - H6	İç Aydınlatma Lambası Interior Lighting Lamp (25W)	S3 - S4	Aydınlatma Anahtarı Lighting Switch (T125 16A)	CON1 ... CON4	Kontaktör / Contactor

CMG CATERING EQUIPMENT	**ÜRÜN ADI / PRODUCT**	**TARİH / DATE**	**ELEKTRİK ŞEMASI** **ELECTRICAL DIAGRAM**
	PF 10570 L	13.08.2018	**SAYFA NO: 4 / 4** **PAGE NO.: 4 / 4**