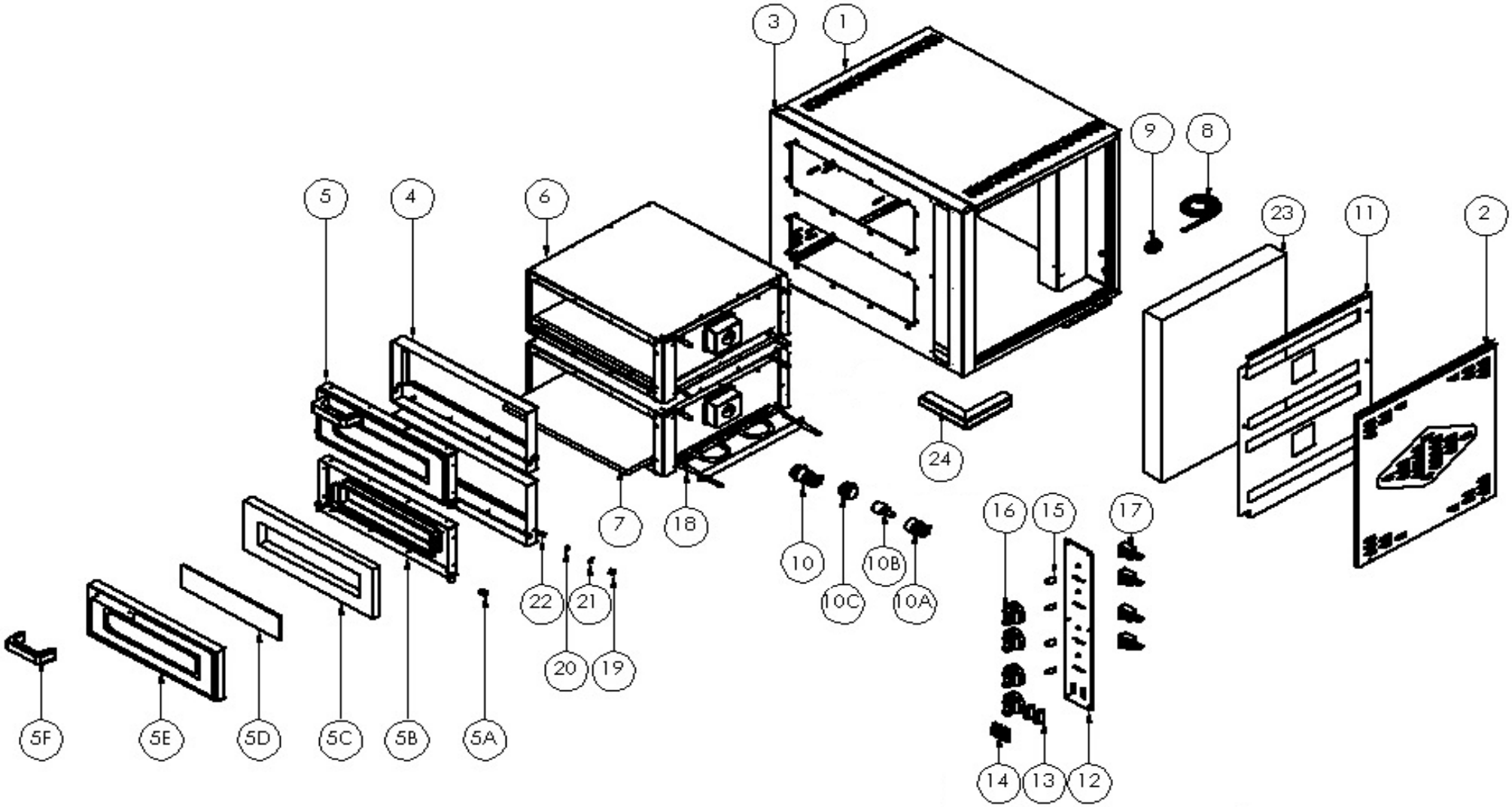

GMG CATERING EQUIPMENT	**ÜRÜN ADI / PRODUCT**	**TARİH / DATE**	**DETAY RESİM** **DETAIL PICTURE**
	PF 4040 DE 4	10.08.2018	**SAYFA NO: 1 / 4** **PAGE NO.: 1 / 4**

PF 4040 DE4					
		Dış Ölçüler	630 x 514 x 525 mm.	**Outside Dim.**	630 x 514 x 525 mm.
		İç Ölçüler	2 x 400 x 400 x 100 mm.	**Inside Dim.**	2 x 400 x 400 x 100 mm.
		Pişirme Alanı	2 x 1 ad. Ø 39 cm.	**Baking Arena**	2 x 1 ad. Ø 39 cm.
		Pişirme Taşı Ölçüleri	2 x 400 x 400 x 14 mm.	**Baking Stone Dim.**	2 x 400 x 400 x 14 mm.
		Termostat Aralığı (°C)	85 - 455 °C (4 ad. Bağımsız)	**Thermostat Interval (°C)**	85 - 455 °C (4 pcs.Independent)
		Aydınlatma	2 ad. 25 W.	**Illumination**	2 pcs. 25 W.
		Toplam Elektrik Gücü (kW)	4 x 1,75 kW = 7 kW.	**Total Power (kW)**	4 x 1,75 kW = 7 kW.
		Elektrik Bes. Gerilimi (V/A)	400 V 3F+N / 3 x 19 A.	**Power Supply Voltage (V/A)**	400 V 3F+N / 3 x 19 A.
		Besleme Kablosu	5 x 2.5 H07RN-F	**Power Supply Cable**	5 x 2.5 H07RN-F
		İç Tesisat Kabloları	SİAF 2,5 mm²	**Internal Cable**	SİAF 2,5 mm²
		İzolasyon	Taş Yünü	**Insulatıon**	Rock Wool
		Ağırlık	54 kg.	**Weight**	54 kg.

NO.	AÇIKLAMA	DESCRIPTION	ÜRÜN NO. / ITEM NO	ADET / PCS.
1	GÖVDE	MAIN BODY	PF4040DE4-01	1
2	YAN KAPAK	SIDE COVER	PF4040DE4-02	2
3	ÖN PASLANMAZ ÇERCEVE	FRONT STAINLESS FRAME	PF4040DE4-03	1
4	EMAYE ÇERCEVE	ENAMEL FRAME	PF4040DE4-04	2
5	FIRIN ÖN KAPAK	OVEN FRONT COVER	PF4040DE4-05	2
5A	M8 İMBUS CİVATA	M8 IMBUS PIN BOLT	PF4040DE4-05A	4
5B	EMAYE KAPAK	ENAMEL COVER	PF4040DE4-05B	2
5C	KAPAK İZOLASYONU	COVER ISOLATION	PF4040DE4-05C	2
5D	GÖZETLEME CAMI	SIGHT GLASS	PF4040DE4-05D	2
5E	PASLANMAZ KAPAK	STAINLESS COVER	PF4040DE4-05E	2
5F	BAKALİT	BAKELITE	PF4040DE4-05F	2
6	PİŞİRME KAZANI	COOKING BOILER	PF4040DE4-06	2
7	PİŞİRME TAŞI	COOKING STONE	PF4040DE4-07	2
8	BESLEME KABLOSU	FEEDING CABLE	PF4040DE4-08	1
9	RAKOR	FEEDING CABLE SOCKET	PF4040DE4-09	1
10	İÇ AYDINLATMA LAMBASI	INTERIOR LIGHTING LAMP	PF4040DE4-10	2
10A	DUY	SOCKET	PF4040DE4-10A	2
10B	AMPÜL	LAMP	PF4040DE4-10B	2
10C	LAMBA CAMI	LAMP GLASS	PF4040DE4-10C	2
11	ELEKTRİK MONTAJ PANOSU	ELECTRICAL MOUNTING PANEL	PF4040DE4-11	1
12	PANEL	PANEL	PF4040DE4-12	1
13	İÇ AYDINLATMA ANAHTARI	INTERIOR LIGHTING BUTTON	PF4040DE4-13	2
14	İÇ AYDINLATMA ANAHTARI KORUMASI	INTERIOR LIGHTING BUTTON PROTECTION	PF4040DE4-14	2
15	TERMOSTAT KONTROL LAMBASI	THERMOSTAT CONTROL LAMP	PF4040DE4-15	4
16	TERMOSTAT DÜĞMESİ	THERMOSTAT BUTTON	PF4040DE4-16	4
17	TERMOSTAT	THERMOSTAT	PF4040DE4-17	4
18	REZİSTANS	RESISTANCE	PF4040DE4-18	4
19	M6 KÖR SOMUN	M6 BLIND NUT	PF4040DE4-19	4
20	M6 DÜZ RONDELA	M6 FLAT WASHER	PF4040DE4-20	4
21	M6 YAYLI RONDELA	M6 SPRING WASHER	PF4040DE4-21	4
22	M6 İMBUS CİVATA	M6 IMBUS PIN BLOT	PF4040DE4-22	4
23	İZOLASYON	INSULATION	PF4040DE4-23	1
24	FIRIN AYAK	OVEN FOOT	PF4040DE4-24	4

GMG CATERING EQUIPMENT	**ÜRÜN ADI / PRODUCT**	**TARİH / DATE**	**DETAY RESİM LİSTESİ** **DETAIL PICTURE LIST**
	PF 4040 DE 4	10.08.2018	**SAYFA NO: 2 / 4** **PAGE NO.: 2 / 4**

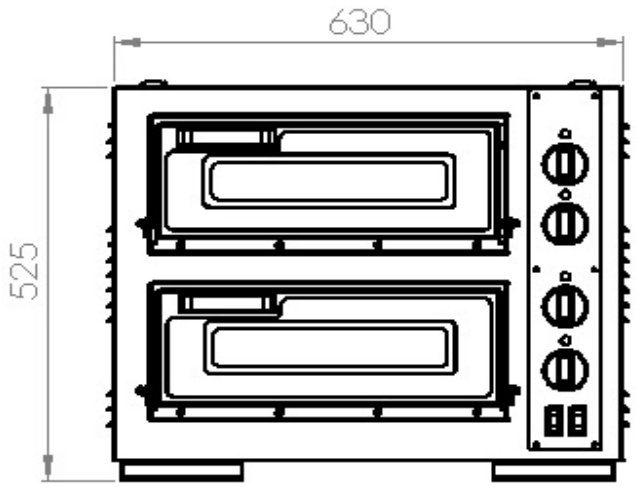

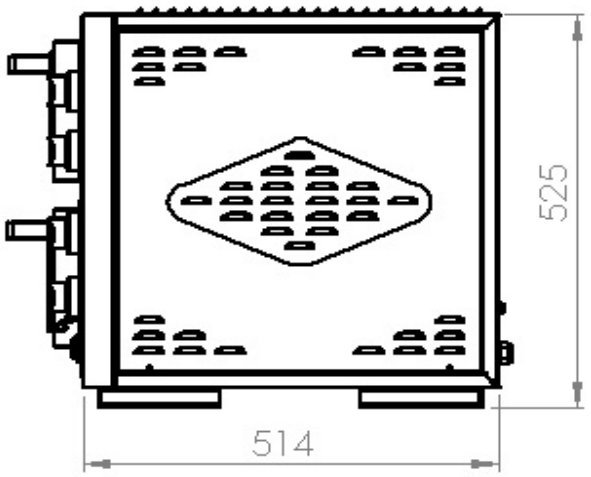

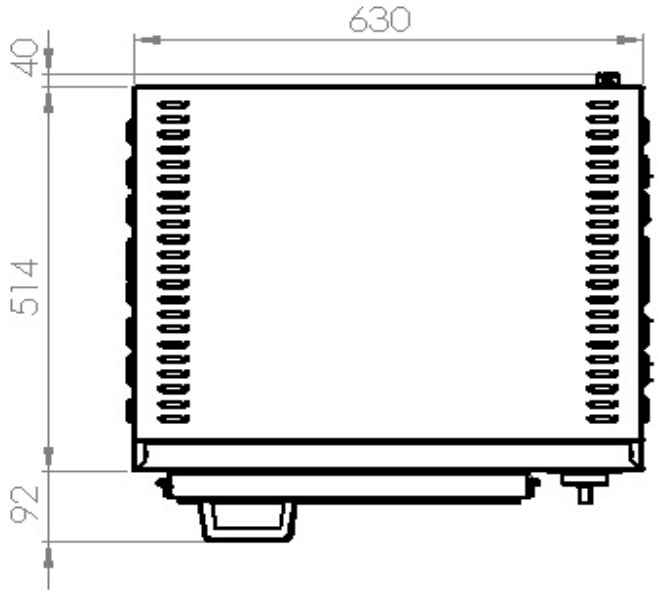

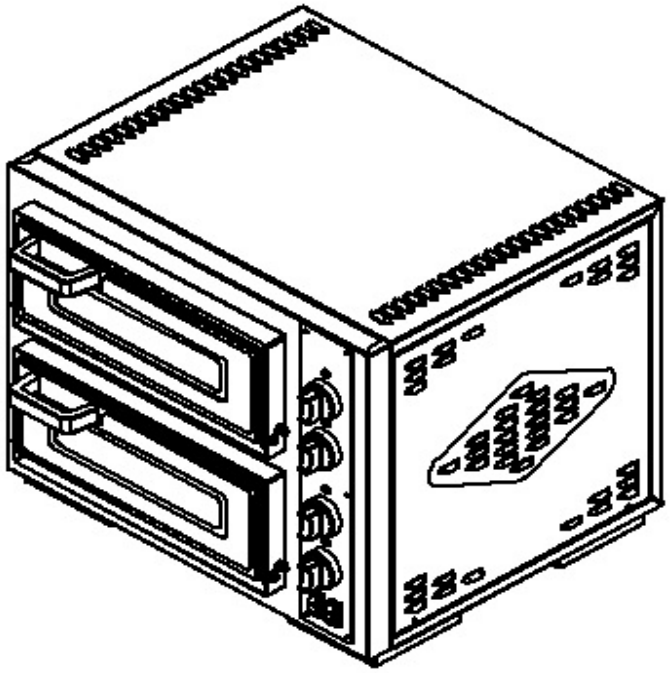

GMG CATERING EQUIPMENT	**ÜRÜN ADI / PRODUCT**	**TARİH / DATE**	**ÖLÇÜLENDİRME MEASUREMENTS**
	PF 4040 DE 4	10.08.2018	**SAYFA NO: 3 / 4 PAGE NO.: 3 / 4**

PF 4040 DE4 PİZZA FIRINI - ELEKTRİK ŞEMASI
PF 4040 DE4 PIZZA OVEN - ELECTRICAL DIAGRAM

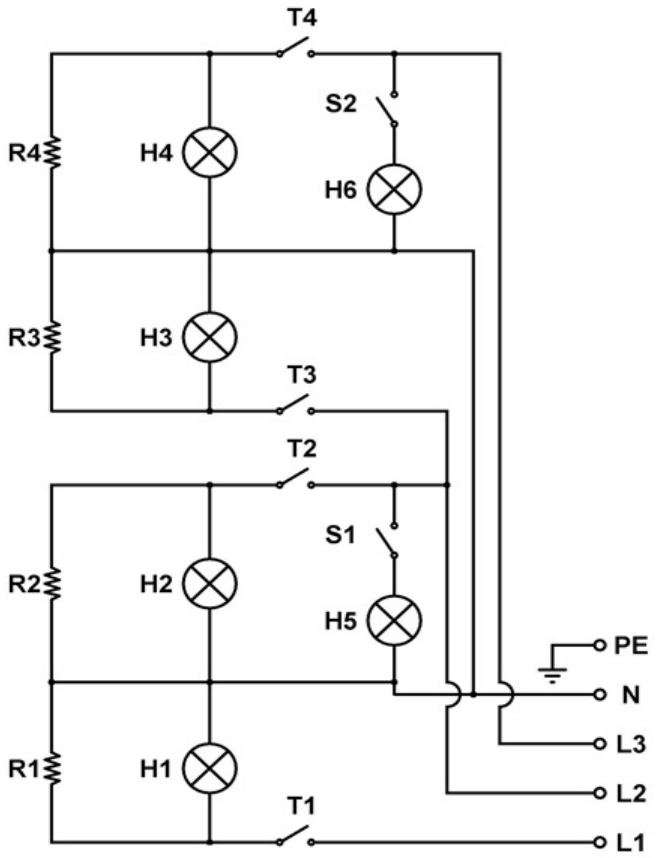

NO	AÇIKLAMA / DESCRIPTION	NO	AÇIKLAMA / DESCRIPTION
R1 - R2 - R3 - R4	Rezistans / Resistance (1750 W)	T1 - T2 - T3 - T4	Termostat / Thermostat (85 - 455 °C)
H1 - H2 - H3 - H4	Termostat Kontrol Lambası Thermostat Control Lamp	S1 - S2	Aydınlatma Anahtarı Lighting Switch (T125 16A)
H5 - H6	İç Aydınlatma Lambası Interior Lighting Lamp (25W)		

	ÜRÜN ADI / PRODUCT	TARİH / DATE	ELEKTRİK ŞEMASI ELECTRICAL DIAGRAM
GMG CATERING EQUIPMENT	PF 4040 DE 4	10.08.2018	SAYFA NO: 4 / 4 PAGE NO.: 4 / 4