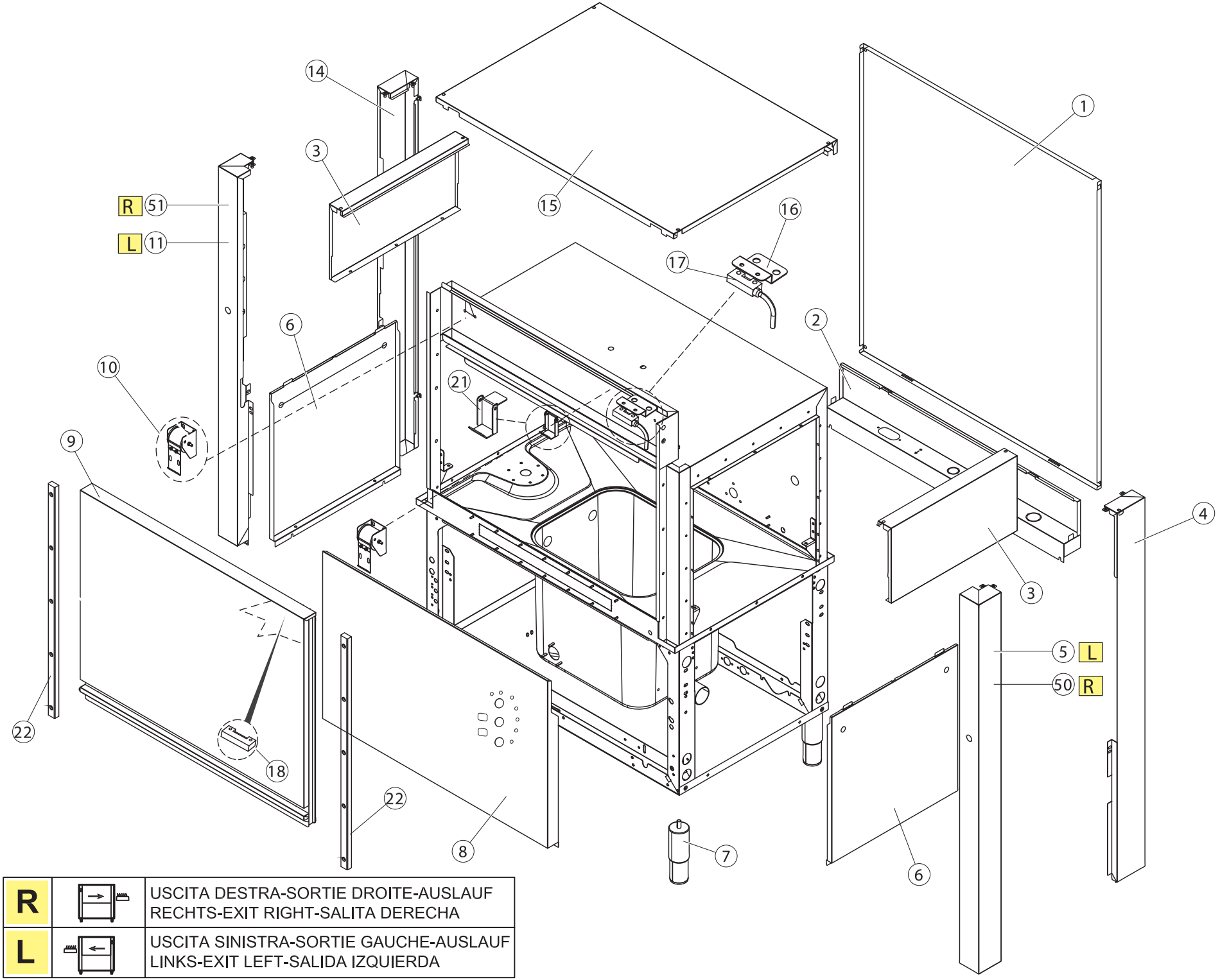

R		USCITA DESTRA-SORTIE DROITE-AUSLAUF RECHTS-EXIT RIGHT-SALITA DERECHA
L		USCITA SINISTRA-SORTIE GAUCHE-AUSLAUF LINKS-EXIT LEFT-SALIDA IZQUIERDA

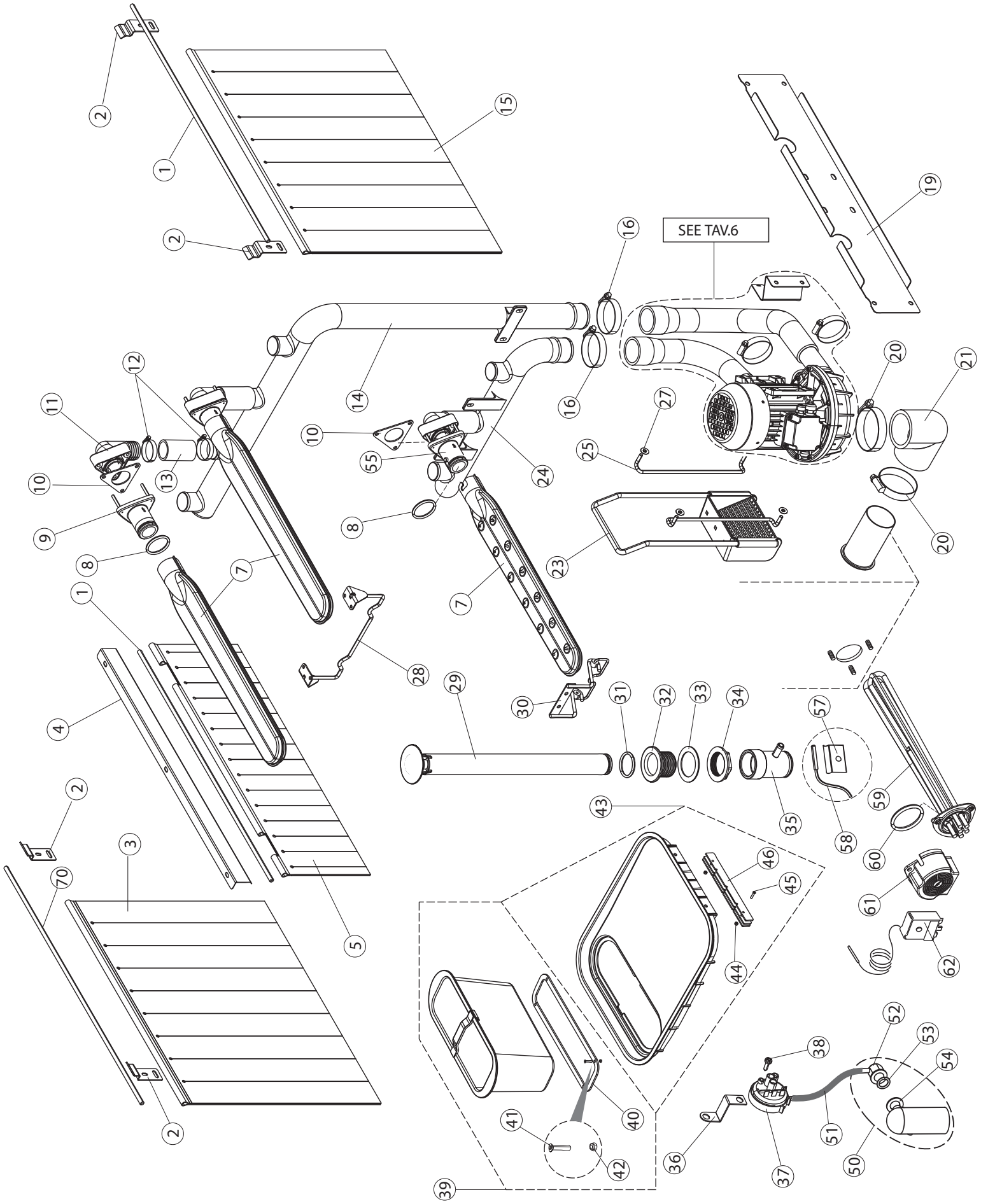
SEE TAV.6

3

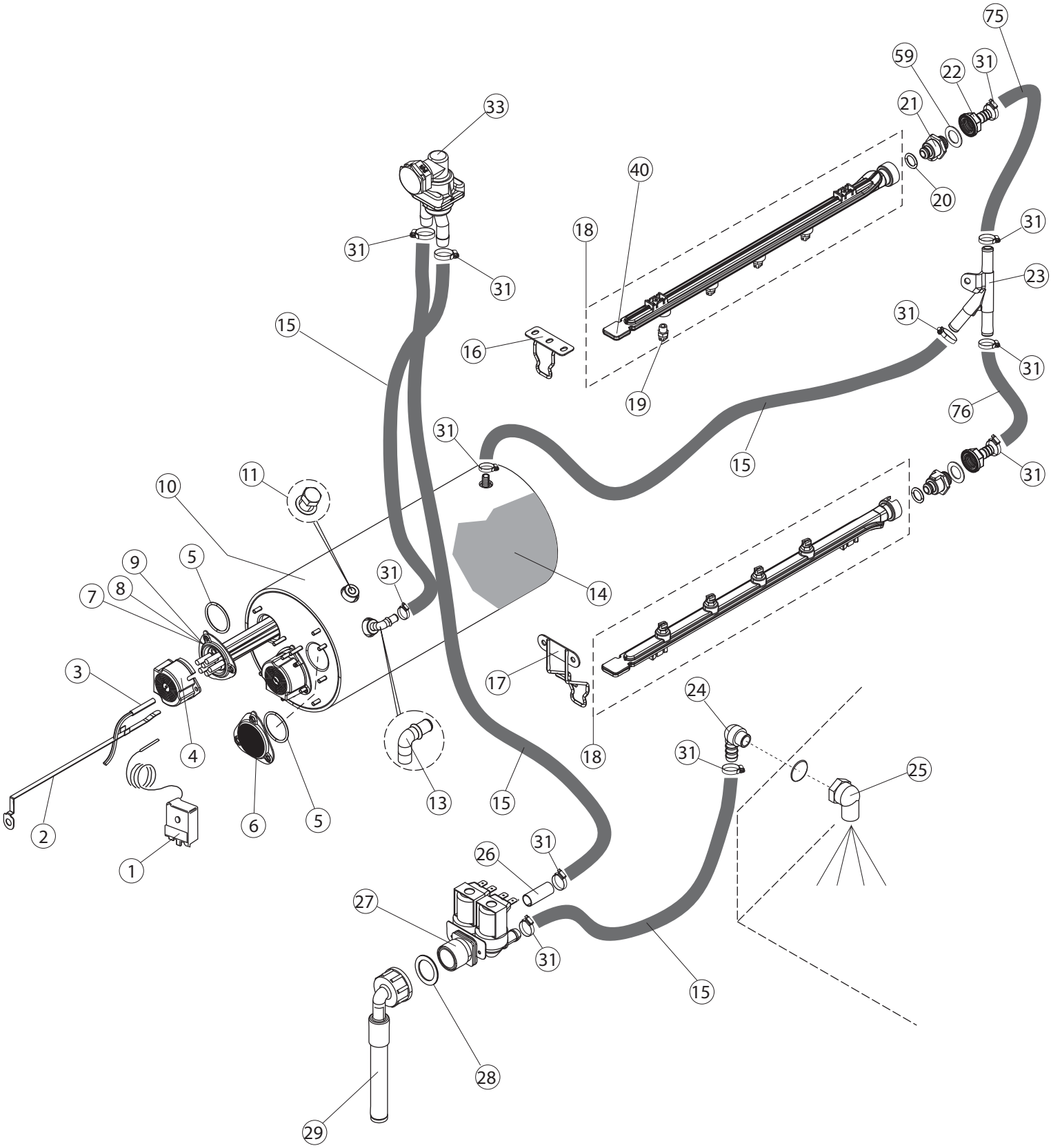

75
59
22
31
21
33
40
20
18
31
31
31
23
15
16
31
31
19
76
31
15
31
11
10
9
5
31
14
7
8
3
17
24
4
18
31
25
2
6
5
13
15
1
31
26
27
31
15
28
29

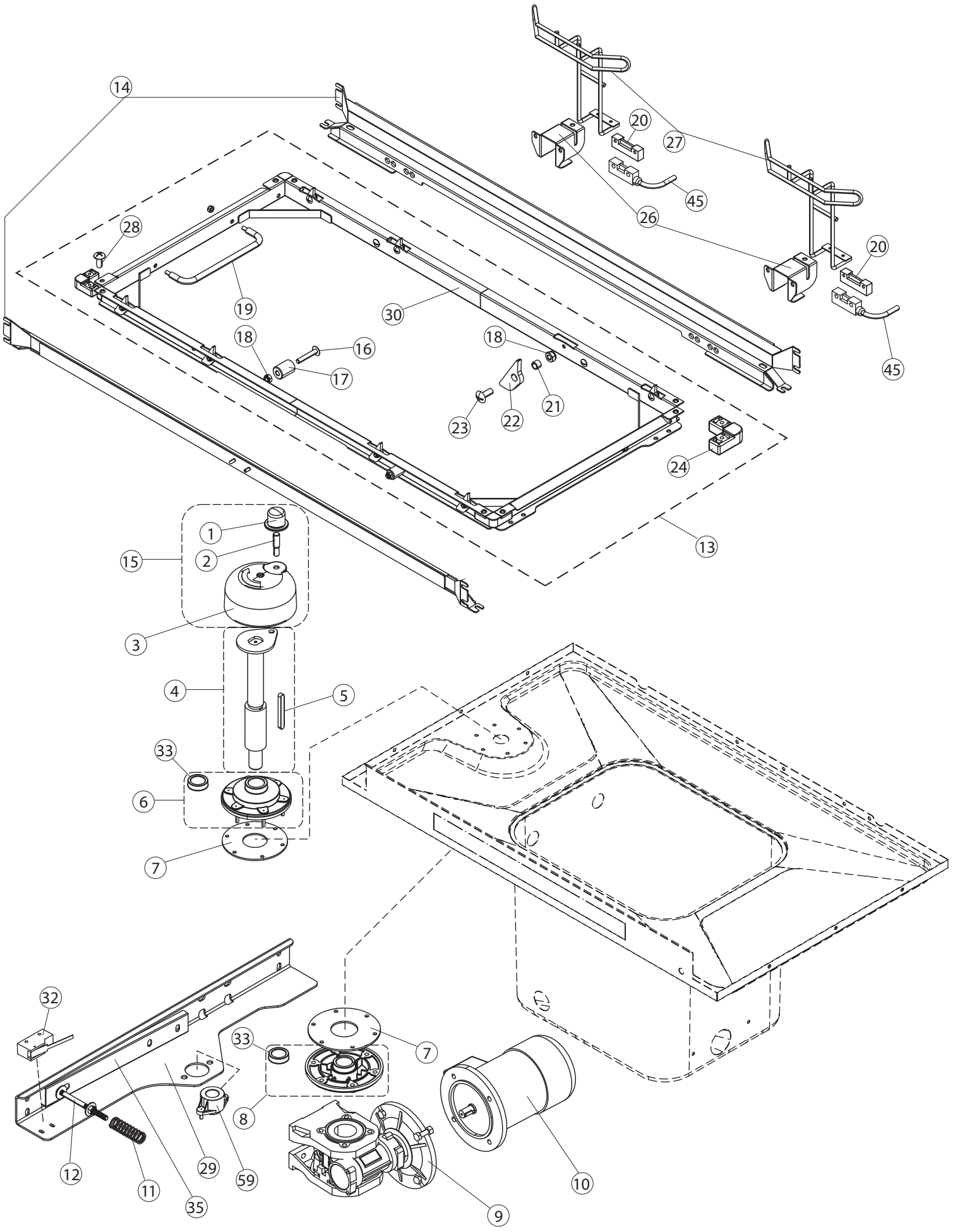
14
28
19
18
16
17
30
18
21
22
23
20
27
45
26
20
45
24
13
1
2
15
3
4
5
33
6
7
32
33
7
8
12
11
29
59
35
9
10

5

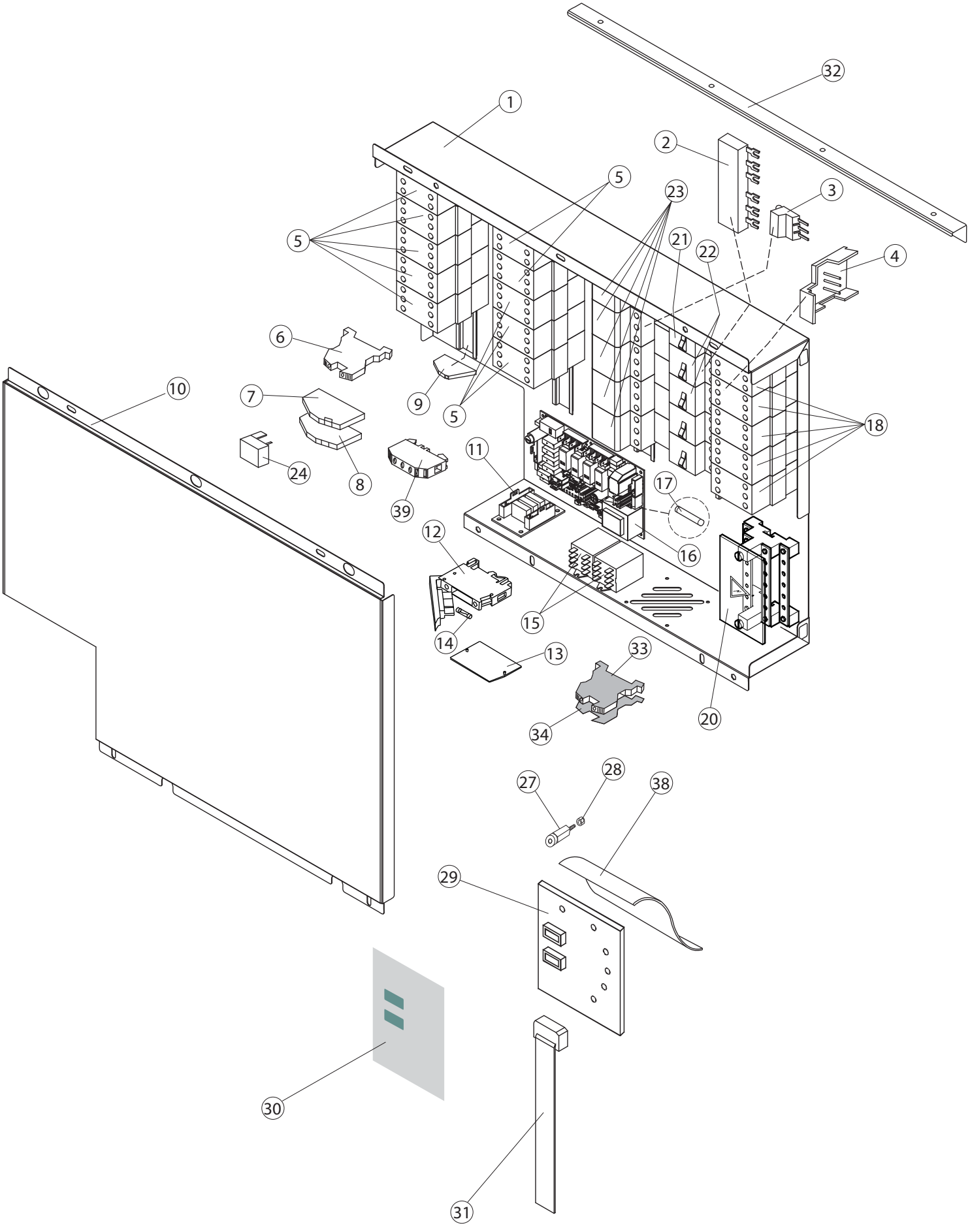

1
2
3
4
5
5
5
6
7
8
9
10
11
12
13
14
15
16
17
18
20
21
22
23
24
27
28
29
30
31
32
33
34
38
39

PLEASE, CHECK THE CORRECT PART NUMBER OF THE WASH PUMP.
USING THE SERIAL NUMBER OF THE MACHINE.
PUMPS KITS (9) and (14) ARE INTERCHANGEABLE.

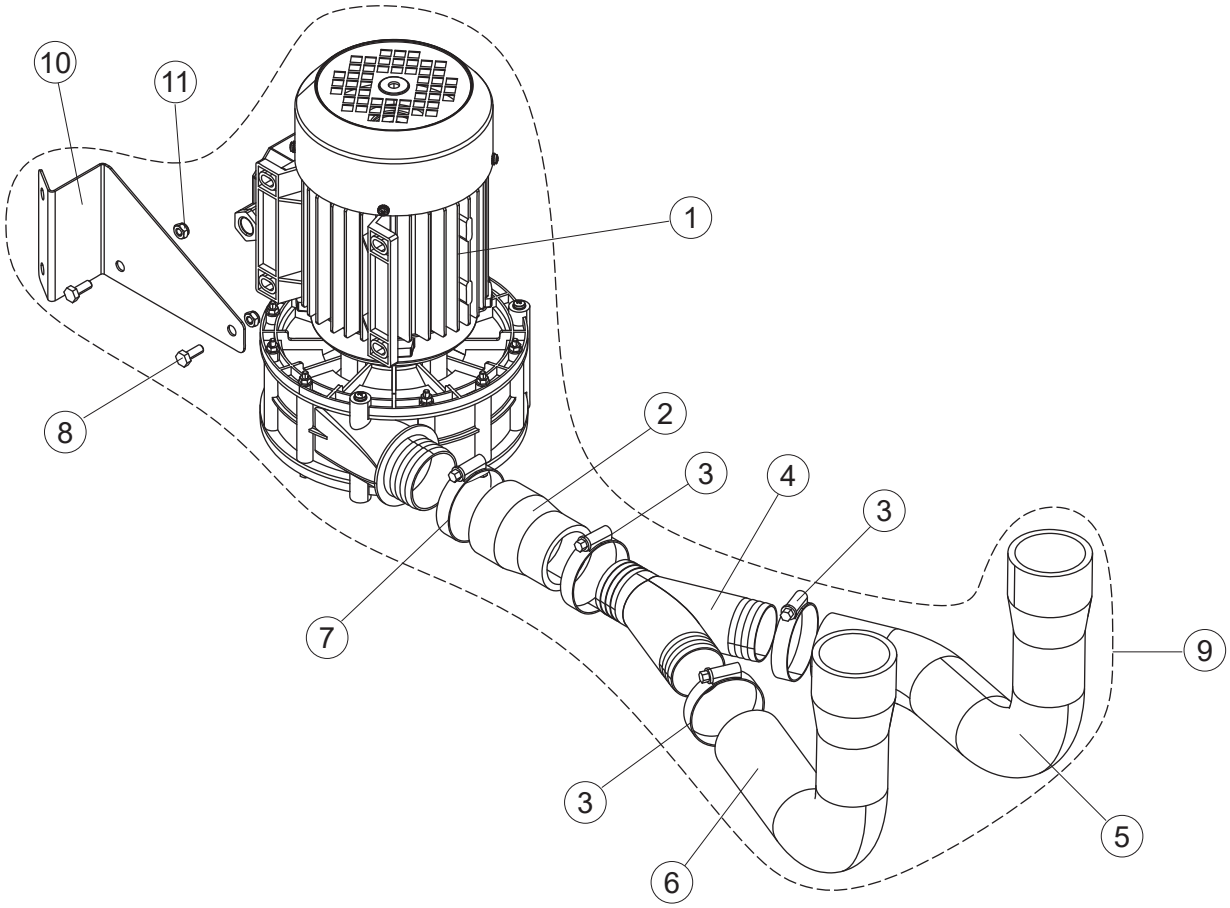

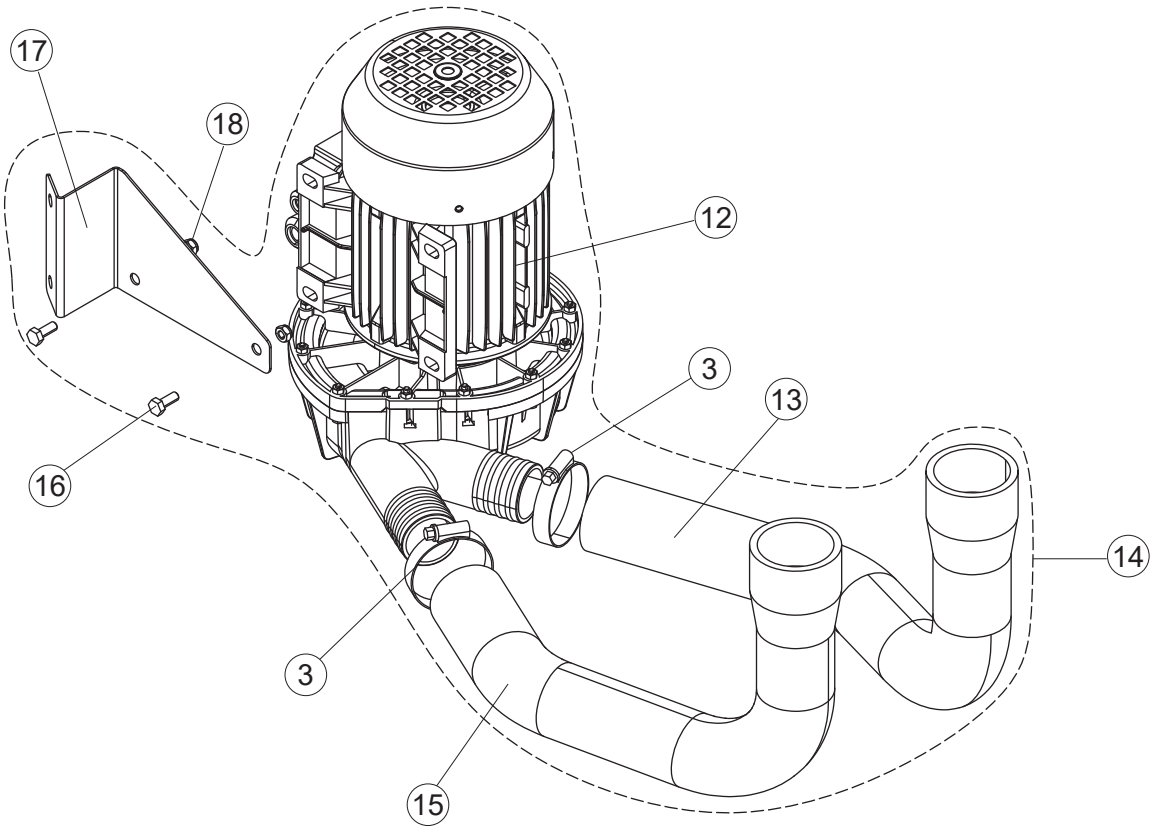

(*) Recommended spare part.

Page	Spare part position	Description	U.m.
1	1	PART NUMBER NO LONGER AVAILABLE (PART NR. REPLACED BY 65448)	
1	1	TOP BACK PANEL	NR
1	2	BACK PANEL	NR
1	3	FRONT PANEL	NR
1	4	CORNER REAR RIGHT PANEL	NR
1	5	SUPPORTING UPRIGHT	NR
1	6	SIDE PANEL	NR
1	7	FOOT	NR
1	8	FRONT PANEL TIPO D CPL	NR
1	9	KIT DOOR WASH UNIT	NR
1	10	DOOR SPRING KIT	NR
1	11	CORNER FRONT RIGHT PANEL	NR
1	14	CORNER REAR LEFT PANEL	NR
1	15	TOP PANEL	NR
1	16	BRACKET	NR
1	17	MAGNETIC DOOR SWITCH	NR
1	18	MAGNET FOR HOOD MICROSWITCH	NR
1	21	DOOR SAFETY HOOK FOR RACK-CONVEYOR	NR
1	22	SLIDES CONVEYOR DOOR	NR
1	50	SUPPORTING UPRIGHT	NR
1	51	CORNER FRONT RIGHT PANEL	NR
2	1	CURTAIN SUPPORT FOR RACK-CONVEYOR DISH-	NR
2	2	SUPPORT BRACKET	NR
2	3	CURTAIN	NR
2	4	CURTAIN SUPPORTING BRACKET	NR
2	5	CURTAIN	NR
2	7	COMPLETE WASH ARM	NR
2	8	O-RING	NR
2	9	CONNECTING ARM	NR
2	10	GASKET	NR
2	11	PIPE FITTING	NR
2	12	PART NUMBER NO LONGER AVAILABLE	

(*) Recommended spare part.

Page	Spare part position	Description	U.m.
2	13	DELIVERY WASH HOSE	NR
2	14	PIPE	NR
2	15	CURTAIN	NR
2	16	CLAMP, TORRO W1/W2B 50-70/12	NR
2	19	BRACKET	NR
2	20	CLAMP, HOSE-TYPE TORRO W2B 60-80/12	NR
2	21	PIPE ELBOW	NR
2	23	PUMP ASPIRATION FILTER	NR
2	24	PIPE + PARZ.77018	NR
2	25	ASPIRATION FILTER SLIDE	NR
2	27	WASHER	NR
2	28	BRACKET	NR
2	29	OVERFLOW PIPE	NR
2	30	SUPPORT BRACKET	NR
2	31	O-RING	NR
2	32	DRAIN CONNECTION	NR
2	33	GASKET	NR
2	34	NUT WASTE DRAIN	NR
2	35	DRAIN FITTING (PLASTIC)	NR
2	36	BRACKET PRESSURE SWITCH	NR
2	37	PRESSURE SWITCH	NR
2	38	SCREW	NR
2	39	COLLECTING FILTER WITH WEIGHT	NR
2	40	WEIGHT FOR BASKET STAINER	NR
2	41	SCREW, INOX 4MAX10 TC/CROSS	NR
2	42	NUT - SELF-LOCK	NR
2	43	STAINER	NR
2	44	NUT - SELF-LOCK	NR
2	45	PART NUMBER NO LONGER AVAILABLE	
2	46	PART NUMBER NO LONGER AVAILABLE	
2	50	AIR TRAP, ASSY	NR
2	51	LINEN RUBBER PIPE 5X12 - BLACK	MT

(*) Recommended spare part.

Page	Spare part position	Description	U.m.
2	52	AIR TRAP CONNECTION OF PRESSURE SWITCH	NR
2	53	O-RING	NR
2	54	PACKING FOR AIR TRAP OF PRESSURE SWITCH	NR
2	55	CONNECTING ARM	NR
2	57	SUPPORT TEMPERATURE PROBE	NR
2	58	TEMPERATURE PROBE	NR
2	59	HEATING ELEMENT 10500W 230/400V	NR
2	60	O-RING	NR
2	61	BOILER HEATING ELEMENT PROTECTION	NR
2	62	SAFETY THERMOSTAT (95) L=1500MM	NR
2	70	CURTAIN SUPPORT FOR RACK-CONVEYOR DISH-	NR
3	1	THERMOSTAT 110 C 67878 + BRACKET	NR
3	2	PROBE HOLDER	NR
3	3	TEMPERATURE PROBE	NR
3	4	BOILER HEATING ELEMENT PROTECTION	NR
3	5	O-RING	NR
3	6	CLOSED FLANGE CAP (170880543)	NR
3	7	HEATING ELEMENT 6KW	NR
3	8	KIT HEATING ELEMENTS REB230020 (8KW)	NR
3	9	READY-TO-ASSEMBLE KIT FOR HEATING	NR
3	10	BOILER	NR
3	11	CAP CHROME-PLATED BRASS	NR
3	13	PIPE FITTING	NR
3	14	COVER INSULATION	NR
3	15	RUBBER PIPE 12X19,5	MT
3	16	BRACKET	NR
3	17	SUPPORT BRACKET RINSE ARM	NR
3	18	RINSE ARM	NR
3	19	STAINLESS STEEL RINSE SPRAY NOZZLE	NR
3	20	O-RING 2050 12.42X1.78 EPDM 70SH A	NR
3	21	INTERNAL RINSE PIPE FITTING AISI303	NR
3	22	PIPE FITTING	NR

(*) Recommended spare part.

Page	Spare part position	Description	U.m.
3	23	MAINFOLD	NR
3	24	BRASS RUBBER-PIPE HOLDER CONNECTION 3/8	NR
3	25	PART NUMBER NO LONGER AVAILABLE (PART NR. REPLACED BY 65876)	
3	25	UNION ELBOW 3/8" AISI316	NR
3	26	FLOW REDUCER	NR
3	27	SOLENOID VALVE	NR
3	28	GASKET	NR
3	29	INLET HOSE	NR
3	31	HOSE CLAMP	NR
3	33	NON-RETURN VALVE	NR
3	40	RINSE ARM	NR
3	59	GASKET ES/AM VERDE 33X21X1,5	NR
3	75	RINSE PIPE L 200 RACC 90	NR
3	76	RINSE PIPE L 380 RACC 90	NR
4	1	WASHER	NR
4	2	PIVOT	NR
4	3	SPLASH PROTECTION	NR
4	4	GEAR SHAFT CONVEYOR	NR
4	5	GEARED MOTOR KEY	NR
4	6	UPPER FLANGE SHAFT CONVEYOR	NR
4	7	GASKET	NR
4	8	LOWER BUSH & SEAL	NR
4	9	GEARMOTOR SW050PA MEC71B5 I=50	NR
4	10	MOTOR 180W V 230/400	NR
4	11	SPRING	NR
4	12	SCREW	NR
4	13	RACK CONVEYOR	NR
4	14	RACK SLIDE RACKCONVEYOR ONLY SPARE PART	NR
4	15	KIT PROTECTIVE PLATE OF SPLASHING WATER	NR
4	16	SCREW	NR
4	17	BUFFER FOR DRIVE STOP	NR
4	18	NUT - SELF-LOCK	NR

(*) Recommended spare part.

Page	Spare part position	Description	U.m.
4	19	RACK CONVEYOR HANDLE	NR
4	20	MAGNET FOR HOOD MICROSWITCH	NR
4	21	BUSH	NR
4	22	RACK CONVEYOR COG	NR
4	23	PART NUMBER NO LONGER AVAILABLE	
4	24	SLED CART TOWING	NR
4	25	PART NUMBER NO LONGER AVAILABLE	
4	26	BRACKET ECONOMIZER	NR
4	27	OPERATED RINSING LEVER	NR
4	28	STAINLESS STEEL SCREW 4MAX10 TBCR-SP	NR
4	29	BRACKET CONVEYOR MOTOR	NR
4	30	TOWING RACK	NR
4	32	MICROSWITCH	NR
4	33	SEAL RING MIM 30X40X7 (MIM 30407)	NR
4	35	SUPPORT BRACKET	NR
4	45	MAGNETIC DOOR SWITCH	NR
4	59	BOTTOM FLANGE SHAFT CONVEYOR	NR
5	1	PANEL FOR ELECTRICAL COMPONENTS	NR
5	2	BAR ELECTRICAL CONNECTION	NR
5	3	POWER CONNECTOR	NR
5	4	CONNECTOR	NR
5	5	CONTACTOR	NR
5	6	TERMINAL BLOCK	NR
5	7	TERMINAL	NR
5	8	TERMINAL	NR
5	9	ELECTRICAL CONNECTOR FOR U-SHAPED BAR	NR
5	10	COVER	NR
5	11	MAIN BOARD	NR
5	12	FUSE-HOLDER	NR
5	13	FUSE-HOLDER	NR
5	14	PART NUMBER NO LONGER AVAILABLE (PART NR. REPLACED BY 228010)	
5	14	FUSE	NR

(*) Recommended spare part.

Page	Spare part position	Description	U.m.
5	15	RELAY	NR
5	16	MAIN BOARD 215042+ FIRMWARE26(FW_0_XXA.Q014)	NR
5	17	FUSE	NR
5	18	CONTACTOR	NR
5	20	TERMINAL BLOCK	NR
5	21	AUTOMATIC SWITCH	NR
5	22	AUTOMATIC SWITCH	NR
5	23	FUSE-HOLDER - TRIPOLAR GK1-DF	NR
5	24	PART NUMBER NO LONGER AVAILABLE	
5	27	INTERFACE BOARD DISTANCE KEEPERS	NR
5	28	NUT	NR
5	29	CONTROL KEYBOARD	NR
5	30	CONTROL ADHESIVE INTERFACE RACK CONVEYOR MAXIMA	NR
5	31	FLAT CABLE	NR
5	32	BRACKET	NR
5	33	TERMINAL	NR
5	34	PART NUMBER NO LONGER AVAILABLE	
5	38	PROTECTIVE SHEET	NR
5	39	TERMINAL BLOCK	NR
6	1	WASHPUMP	NR
6	2	HOSE	NR
6	3	HOSE CLAMP	NR
6	4	CONN.	NR
6	5	DELIVERY WASH HOSE	NR
6	6	PART NUMBER NO LONGER AVAILABLE	
6	7	CLAMP, TORRO W1/W2B 50-70/12	NR
6	8	PART NUMBER NO LONGER AVAILABLE	
6	9	WASHPUMP	NR
6	10	PART NUMBER NO LONGER AVAILABLE	
6	11	PART NUMBER NO LONGER AVAILABLE (PART NR. REPLACED BY 417086)	
6	12	WASHPUMP	NR
6	13	PIPE	NR

(*) Recommended spare part.

Page	Spare part position	Description	U.m.
6	14	WASHPUMP	NR
6	15	PART NUMBER NO LONGER AVAILABLE	
6	16	SCREW	NR
6	17	PART NUMBER NO LONGER AVAILABLE	
6	18	PART NUMBER NO LONGER AVAILABLE (PART NR. REPLACED BY 417087)	
6	18	NUT	NR